DANUSER®

ESTABLISHED 1910 · FULTON, MISSOURI

HAMMER

SM40

Read this entire manual. This safety alert symbol is used throughout this manual to call your attention to messages involving your personal safety and the safety of others. Failure to follow these instructions can result in injury or death.

Owner: _____

Date Purchased: _____

Model #: _____ Serial #: _____

Manual #: 9MHAM2460816

Operator's Manual

WARNING

Si no entiende ingles, se prefiere que busque a alguien que interprete las instrucciones para usted.

Danuser Machine Company, LLC
500 E. 3rd St.
P.O. Box 368
Fulton, MO 65251
Tel: (573) 642-2246
E-mail: sales@danuser.com
Website: www.danuser.com

Dear Owner/Operator,

Thank you for purchasing this Danuser Hammer. We appreciate your business.

The Hammer is designed to drive posts and guard rails. A kit is available to convert the driver to a concrete breaker. With the hydraulic grapple option, one person can pick up, load, and drive posts.

Your safety as an operator of our product is very important to us. Therefore, ***before*** you assemble, install, operate, maintain, service, remove, or move your Danuser Hammer, read and understand this manual thoroughly. If there is anything you do not understand, immediately contact your dealer, or contact our factory direct.

Tel: (573) 642-2246
E-mail: sales@danuser.com

Your satisfaction in the performance and longevity of our product is also very important to us and can be prolonged by proper assembly, installation, operation, and maintenance as instructed in this manual.

Thank you again for your business and for your trust in our product. Please feel free to contact us at any time for further assistance.

Sincerely,

Danuser Machine Company, LLC
500 E. 3rd St.
P.O. Box 368
Fulton, MO 65251

Tel: (573) 642-2246
E-mail: sales@danuser.com Website: www.danuser.com

Danuser provides this manual "as is" without warranty of any kind, either expressed or implied. Danuser assumes no responsibility for errors or omissions. Danuser assumes no liability for damages resulting from the use of the information contained herein. Danuser reserves the right to revise and improve its products as it sees fit. This manual describes the state of this product at the time of its publication and may not reflect the product in the future.

Danuser is a registered trademark.

Foreword

Please read this manual thoroughly!
Before you assemble, install, operate, maintain, service, remove, or move your Danuser Hammer, read this manual thoroughly. If there is anything you do not understand, immediately contact your dealer, or call our factory direct at (573) 642-2246. Powered equipment can be dangerous if not assembled, installed, operated, maintained, serviced, removed, or moved properly.

Warranty Registration
To activate your warranty coverage and to provide you with efficient customer service, please fill out your WARRANTY REGISTRATION FORM. This form is included in your unit's paperwork package. If you did not complete a WARRANTY REGISTRATION FORM or did not receive one, please call Danuser. Or, register online at www.danuser.com. Your satisfaction with our product and your safety as a user of our product are both very important to us.

Symbols

This SAFETY ALERT symbol identifies important safety messages. Carefully read each safety message that follows. Failure to understand and obey a safety message, or recognize a safety hazard, could result in injury or death to you or others around you. The operator is ultimately responsible for the safety of himself, as well as others, in the operating area of the Hammer.

Symbol	*Meaning*
DANGER	Indicates an imminently hazardous situation which, if not avoided, **will** result in death or serious injury.
WARNING	Indicates a potentially hazardous situation which, if not avoided, **could** result in death or serious injury, including hazards that are exposed when guards are removed.
CAUTION	Indicates a potentially hazardous situation which, if not avoided, **may** result in minor or moderate injury. It may also be used to alert against unsafe practices.
NOTE	This is important information for proper use of this equipment. Failure to comply may lead to premature equipment failure.

Table of Contents

Page

Letter to Owner/Operator 2
Foreword 3
Symbols. 3
Safety 4
Decals & Safety Signs 7
Specifications 9
Hydraulic Requirements 10
Assembly & Installation 11
Operation. 16
Removal & Storage. 23
Troubleshooting 24
Maintenance & Lubrication 25
Service. 27
Torque Values Chart 33
Parts. 34
Accessories 44
Warranty . . . . . PD 5034A

⚠WARNING

Working with unfamiliar equipment can lead to careless injuries. Read and understand this manual and the manual for your vehicle before assembling, installing, operating, maintaining, servicing, removing, or moving this Danuser Hammer. If there is anything in this manual you do not understand, contact your dealer or Danuser. The safe use of this attachment is strictly up to you, the operator. If this attachment is used, loaned, or rented by any other person, it is the owner's responsibility to make certain that the operator prior to operating:

- Reads and understands the Operator's Manual
- Is instructed in safe and proper use

- The Hammer is designed to be operated from the vehicle operator station. Keep bystanders away from the work area. Do not operate with another person in contact with any part of the Hammer.
- All operators of this attachment must read and understand this entire manual, paying particular attention to safety messages and operation instructions, prior to assembling, installing, operating, maintaining, servicing, removing, or moving the Hammer.
- Please remember it is also important that you read, understand, and follow safety signs on the attachment. Clean or replace all safety signs if they cannot be clearly read and understood. They are there for your safety as well as the safety of others. Danuser will furnish new safety signs upon request at no charge.
- All things with moving parts are potentially hazardous. There is no substitute for a cautious, safe-minded operator who recognizes potential hazards and follows reasonable safety practices.
- Personal protection equipment including hard hat, safety glasses, safety shoes, gloves, and hearing protection are recommended during assembly, installation, operation, maintenance, service, removal, or movement of the attachment.
- When the use of hand tools is required to perform any part of assembly, installation, operation, maintenance, or service of the attachment, be sure the tools used are designed and recommended by the tool manufacturer for that specific task.
- Never check pressurized system for leaks with your bare hand. Wear proper hand and eye protection and use wood or cardboard when searching for suspected leaks. Oil escaping from pinhole leaks under pressure can penetrate skin and create a serious medical emergency. If any fluid is injected into the skin, gangrene, blood poisoning, even death may result. Obtain medical attention immediately.
- Always use two people to handle heavy, unwieldy components during assembly, installation, maintenance, service, removal, or movement of the attachment.
- Never place any part of your body where it would be in danger if movement should occur during assembly, installation, operation, maintenance, service, removal, or movement of the Hammer.
- Only properly trained people should operate this equipment. Do not allow anyone who has not read this entire manual and understands the safety rules, safety signs, and operation instructions to use this attachment.
- Never allow children to operate or be around the Hammer.
- Do not allow riders on the equipment at any time. There is no safe place for any riders.
- Never use alcoholic beverages or drugs which can hinder alertness or coordination while operating this equipment. Consult your doctor about operating this equipment while taking prescription or over-the-counter medications.

- Safe operation of equipment requires the operator's full attention. Avoid distractions such as radio headphones, cell phones, etc. while operating.
- Contact with underground gas lines or electrical cables may result in serious injury or eath from explosion or electrical shock. Before operating, call 811 or the local number to locate underground utilities.
- Do not drive posts near underground utility lines.
- Stay away from power lines when transporting, raising, or operating the attachment. Electrocution can occur without direct contact.
- The Hammer must be securely latched to the vehicle. Ensure both locking handles are in the locked position with pins fully seated. An improperly latched Hammer can fall without warning.
- Before you operate the attachment, check over pins and connections to be sure all are securely in place.
- Make sure all guards are in place and secure before operating equipment.
- Keep hands, feet, hair, jewelry, and clothing away from all moving and/or rotating parts.
- Never place yourself between the vehicle and the attachment.
- Never allow anyone under the attachment at any time.
- Keep clear of the Hammer while in operation. Never position, align, or support the post by hand or with any tool when the Hammer is in operation.
- Do not exceed the vehicle's rated operating load. Use sufficient counterweights. Move the vehicle slowly when the attachment is raised.
- Carry the load low. A heavy load can cause instability of the vehicle. Use extreme care during travel. Slow down on turns and watch out for bumps. Use all safety devices, including a seat belt, as recommended in the vehicle operator’s manual.
- Do not operate the Hammer on steep hillsides. When operating the Hammer on uneven or hilly terrain, position the vehicle with the attachment uphill. With the attachment downhill, the vehicle could tip when attempting to raise the Hammer. Consult your vehicle operator’s manual for maximum incline allowable.
- Always shut off the vehicle engine, remove the key, lower vehicle arms, and relieve all hydraulic pressure before dismounting the vehicle. Never leave equipment unattended with the vehicle running.
- Never attempt adjustments, service, or repairs while the equipment is in operation.
- Never work under equipment supported by hydraulics. Even with the vehicle shut off equipment can suddenly drop if controls are actuated or if hydraulic lines burst.
- Before servicing or adjusting attachment, relieve all stored energy.
- Before connecting or disconnecting hydraulic lines or fittings, be sure to relieve all pressure by cycling all hydraulic controls after shutdown. Remember hydraulic systems are under pressure whenever the engine is running and may hold pressure after shutdown.
- Store the attachment on a flat, level surface in an area where children do not play. Securely block and support the attachment.
- Do not modify the attachment. Modifications may weaken the integrity of the attachment and may impair the safety, function, life, and performance of the Hammer.

- When making repairs or servicing the Hammer, use only parts that meet original equipment manufacturer's standards and requirements.
- Always use care when operating the Hammer. Most accidents occur because of neglect or carelessness.

Safety is a primary concern in the design, manufacture, sale, and use of Hammers. Danuser confirms to you, our customer, our concern for safety.

⚠ DANGER

Improper operation of this Hammer can cause serious personal injury or death. Operation of this attachment should only be done by a competent adult acting in compliance with the Operator's Manual. Since Hammer operations are beyond our control, we disclaim all liability for any damages, injuries, or death which may result.

⚠ WARNING

This product can expose you to chemicals known to the State of California to cause cancer and birth defects or other reproductive harm. For more information go to www.P65Warnings.ca.gov/product.

Decals & Safety Signs

The Hammer comes equipped with all safety signs in place. Their locations are shown in this section. Read and follow their instructions and ensure their care:

- Keep safety signs clean and legible at all times.
- Replace safety signs that are missing, illegible, or damaged.
- Ensure replacement parts installed during repair have safety signs attached.

To install new safety signs, follow these steps:

1. Clean the area where the safety sign is to be placed.
2. Spray a little soapy water on the surface where the safety sign is to be placed.
3. Peel the backing from the safety sign and apply it in the position shown.
4. Firmly press the safety sign and squeeze out the air bubbles with a straight edge (e.g., a credit card).

PART NO. DIG13
Location: Unit, right side

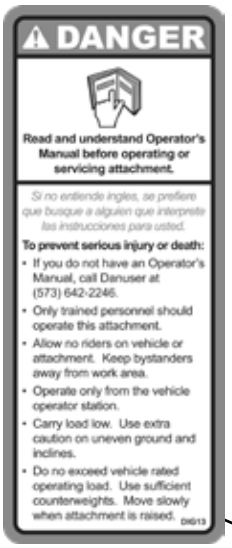

PART NO. DIG21
Location: Unit, right side

PART NO. DANUSER109
Location: Unit, front

PART NO. DIG16
Location: Unit, right side

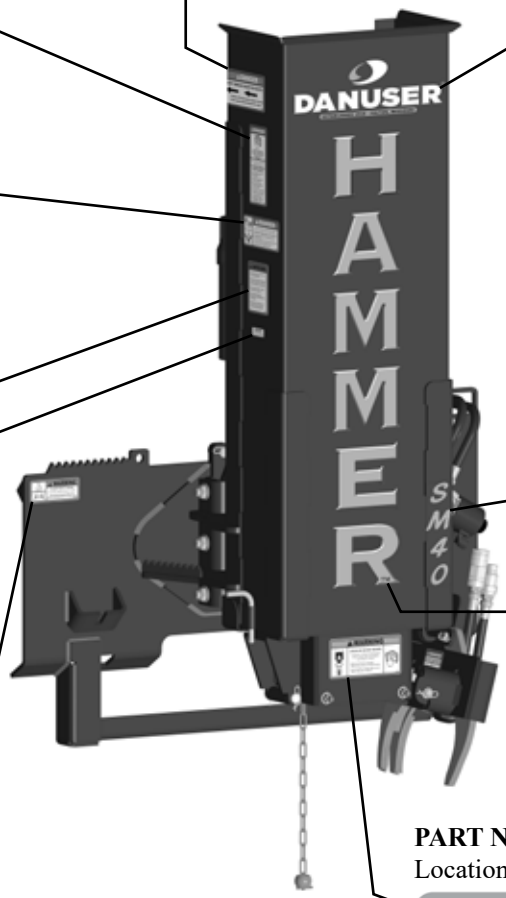

PART NO. 21168
Location: Unit, front

PART NO. 21161
Location: Unit, front

PART NO. DIG14
Location: Unit, right side

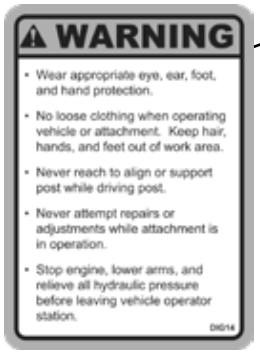

PART NO. CA65
Location: Unit, right side

PART NO. DIG35
Location: Quick attach plate, front

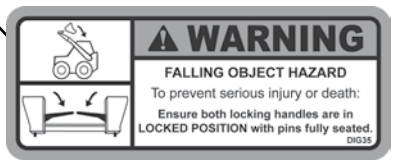

PART NO. DIG44
Location: Unit, front

⚠WARNING

Clean or replace all safety signs if they cannot be clearly read and understood.

Decals & Safety Signs

(continued)

Model No. & Serial No.
Location: Unit, rear

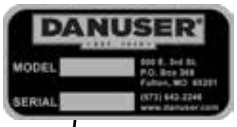

PART NO. DIG22
Location: Unit, top

PART NO. 20658
Location: Unit, rear

PART NO. DIG5
Location: Unit, left side

PART NO. 20673
Location: Unit, rear

PART NO. DIG45
Location: Unit, rear

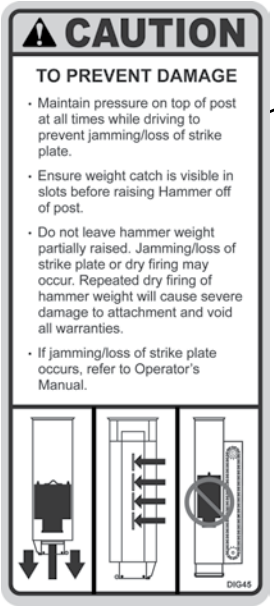

PART NO. PHDC6
Location: Unit, inside rear

PART NO. DIG24
Location: Unit, rear

PART NO. DIG26
Locations: Grapple, top; Grapple, bottom

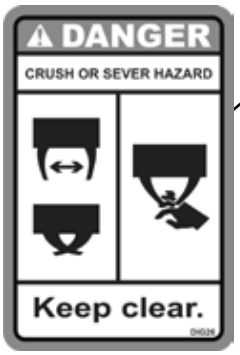

PART NO. DIG25
Location: Tilt plate, rear

WARNING

Clean or replace all safety signs if they cannot be clearly read and understood.

Specifications

Operator's Manual
Direction Terminology

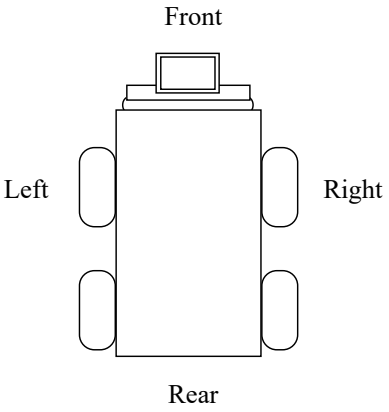

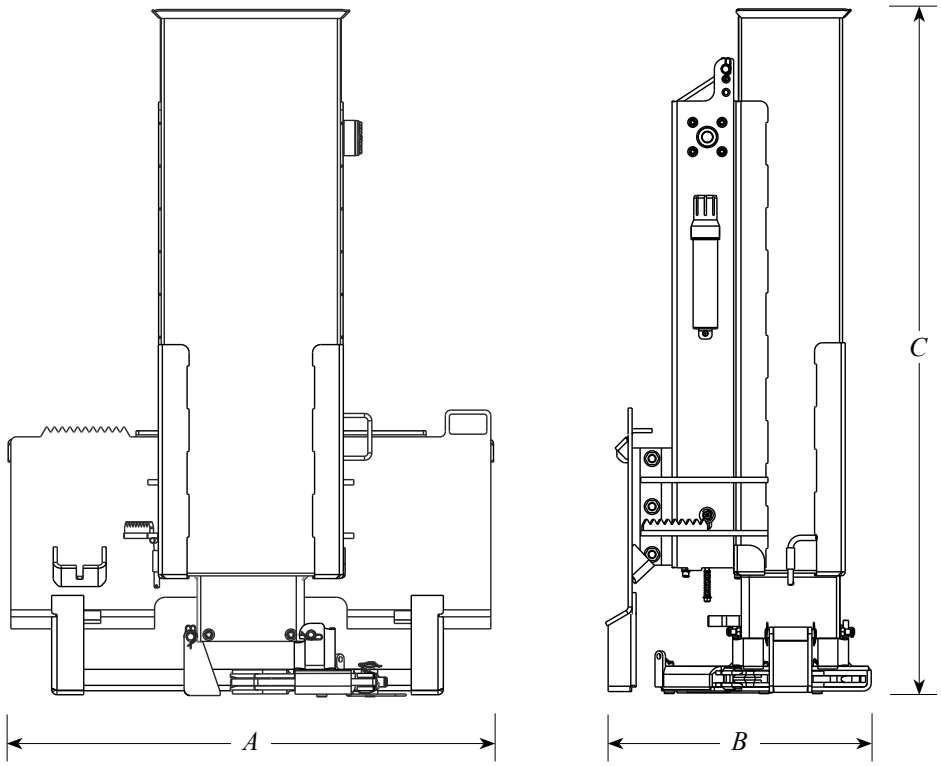

Hammer	Model SM40			
	Base	w/ Grapple	w/ Tilt	w/ Tilt & Grapple
Overall Width (A)	45.5"			
Overall Length (B)	25"		25.5"	
Overall Height (C)	64"			
Tilt (left or right)	N/A		20°	
Hammer Weight	300 lb. (500 lb. max.)			
Length of Stroke	40"			
Max. Strokes Per Minute	35			
Hydraulic Requirements	1,500-3,000 PSI Up to 30 GPM			
Maximum Post Size	8.5" x 9.25"			
Impact Force	82,000 lb. with 500 lb. weight			
Impact Energy	1,025 ft.-lb. with 300 lb. weight; 1,709 ft.-lb. with 500 lb. weight			
Hitch	Skid-Steer Quick Attach			

Hydraulic Requirements

Filtration Requirements:

- A filter of, at least, 10 micron filtration is required.

NOTE The life of the hydraulic componentry is almost entirely dependent upon cleanliness of the oil. Instructions in your vehicle operator's manual regarding filter and oil changes should be carefully followed. Even small amounts of dirt in the hydraulic oil can cause premature hydraulic componentry failure that is not covered by warranty.

Pressure and Flow Requirements:

- The Hammer is designed to operate up to 30 GPM and 1,500 – 3,000 PSI.

Hydraulic Fluid Selection Requirements:

- Premium grade petroleum based fluids will provide the best performance.
- Fluids that contain anti-wear agents, rust inhibitors, anti-foaming agents, and oxidation inhibitors are recommended.
- The viscosity of the fluid should never fall below 70 SUS (13 cST). The best viscosity range for the Hammer is 100-200 SUS (20-43 cST).

⚠ DANGER

Never allow anyone under the attachment at any time.

⚠ WARNING

Personal protection equipment including hard hat, safety glasses, safety shoes, gloves, and hearing protection are recommended during assembly, installation, operation, maintenance, service, removal, or movement of the attachment.

⚠ WARNING

Before servicing or adjusting attachment, relieve all stored energy.

⚠ CAUTION

Always use two people to handle heavy, unwieldy components during assembly, installation, maintenance, service, removal, or movement of the attachment.

Installation of Additional Weight

For tough driving conditions or large posts, additional weight can be added up to 500 lb. total hammer weight by purchasing a weight kit or by adding weight. Add weight in a variety of ways: logging chain, metal punch slugs, lead tire weights, etc. Do not use concrete or sand, as damage may result.

Recommended Tools

- Band cutter
- 9/16" wrench
- Lifting hook
- 1-1/8" wrench
- Hammer
- Punch

STEP 1: Ensure the hammer weight is not partially raised by making sure the weight catch is visible through the viewing slots on the back of the case.

STEP 2: Remove the retention pin from the top of the case. Insert a hook into the lifting eye located on the top of the weight. Lift the weight out of the Hammer with a hoist, forklift, or another vehicle. Set the weight on the ground.

STEP 3: Remove the weight cover by loosening the two lock nuts. It may be necessary to use a hammer and punch in order to break the weight cover loose.

STEP 4: Place the additional weight into the cavity of the hammer weight until full.

STEP 5: Reinstall the weight cover using the two washers and lock nuts, making sure to seal the cover with silicone sealant.

STEP 6: Lower the weight back into the Hammer and reinstall the retention pin.

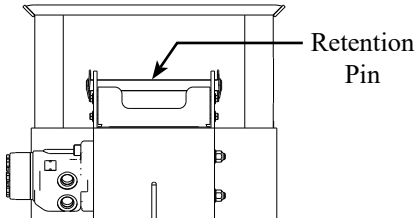

⚠ WARNING

Do not tilt or operate the Hammer without the retention pin in place. The hammer weight could slide out of the Hammer and cause serious injury or death.

Prepare the Vehicle

Read and understand the manual for your vehicle before assembling or installing the Hammer. The vehicle must be equipped with a skid-steer quick attach hitch and auxiliary hydraulics. The use of the Hammer may require the addition of counterweights to ensure the combined weight of the attachment and load does not exceed the rated capacity of your vehicle.

⚠ WARNING

Do not exceed the vehicle's rated operating load. If necessary, use sufficient counterweights.

STEP 1: Park the vehicle on level ground, and install the Hammer by following your vehicle operator's manual for installing an attachment.

⚠WARNING

The Hammer must be securely latched to the vehicle. Ensure both locking handles are in the locked position with pins fully seated. An improperly latched Hammer can fall without warning.

STEP 2: Raise the Hammer slightly, and latch the parking stand into the upright position.

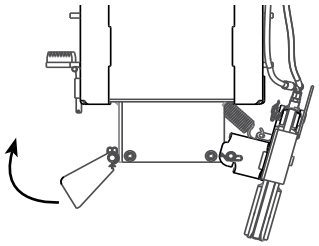

STEP 3: Route the hydraulic hoses through the quick attach plate hose holder, and connect the hydraulic hoses to the vehicle's auxiliary hydraulics.

⚠WARNING

Before connecting or disconnecting hydraulic lines or fittings, be sure to relieve all pressure by cycling all hydraulic controls after shutdown. Remember hydraulic systems are under pressure whenever the engine is running and may hold pressure after shutdown.

NOTE Ensure quick couplers are clean prior to connection.

NOTE Hose routing is the responsibility of the operator. Pinched and/or stretched hoses are not covered under the warranty.

STEP 4: Activate the auxiliary hydraulics to make sure the grapple and/or tilt is functioning correctly. Note the direction of the chain rotation (visible from the operator's station). The weight catch should be rotating from the top to the bottom. If the chain is not rotating at all, reverse the hydraulic hoses.

STEP 5: Check the hydraulic system for leaks.

⚠WARNING

Never check pressurized system for leaks with your bare hand. Wear proper hand and eye protection and use wood or cardboard when searching for suspected leaks. Oil escaping from pinhole leaks under pressure can penetrate skin and create a serious medical emergency. If any fluid is injected into the skin, gangrene, blood poisoning, even death may result. Obtain medical attention immediately.

⚠WARNING

Keep hands, feet, hair, jewelry, and clothing away from all moving and/or rotating parts.

Assembly & Installation

(continued)

STEP 6: Ensure the retention pin is in place. The retention pin prevents the hammer weight from sliding out of the Hammer.

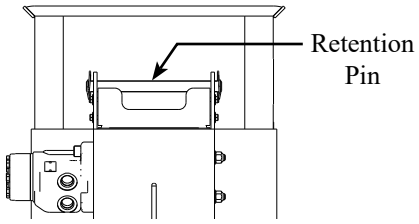

⚠WARNING

Do not tilt or operate the Hammer without the retention pin in place. The hammer weight could slide out of the Hammer and cause serious injury or death.

STEP 7: Shut off the vehicle engine and relieve all hydraulic pressure.

STEP 8: Oil the Hammer drive chain, and grease all zerks.

Tilt Option

If the Hammer is equipped with Tilt, follow the instructions below.

STEP 9: Grease the grease zerk on the tilt pivot boss.

STEP 10: Route the wires along the hydraulic hoses to the vehicle, and secure them with zip-ties.

STEP 11: Route the control portion of the wiring harness along the loader arm of the vehicle and into the cab, and secure the wiring with zip-ties. Mount the switch out of the way of other controls.

NOTE Keep wiring a safe distance from hot components such as a heater or exhaust.

STEP 12: Connect the wiring harness to a 12 volt auxiliary power outlet. If necessary, consult your dealer.

Assembly & Installation

Specialized Strike Plate Installation

⚠DANGER

Never allow anyone under the attachment at any time.

Included with the Hammer is a PN 21124 strike plate which is suitable for driving the majority of posts in most ground conditions. Specialized strike plates are available when driving special posts or to reduce wear and tear on the Hammer when driving smaller diameter posts in extreme conditions.

STEP 1: Park the vehicle on level ground, and install the Hammer by following your vehicle operator's manual for installing an attachment.

⚠WARNING

The Hammer must be securely latched to the vehicle. Ensure both locking handles are in the locked position with pins fully seated. An improperly latched Hammer can fall without warning.

⚠WARNING

Personal protection equipment including hard hat, safety glasses, safety shoes, gloves, and hearing protection are recommended during assembly, installation, operation, maintenance, service, removal, or movement of the attachment.

⚠WARNING

Before servicing or adjusting attachment, relieve all stored energy.

STEP 2: Ensure the retention pin is in place. The retention pin prevents the hammer weight from sliding out of the Hammer.

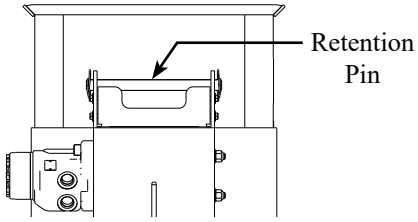

⚠WARNING

Do not tilt or operate the Hammer without the retention pin in place. The hammer weight could slide out of the Hammer and cause serious injury or death.

STEP 3: Using the vehicle, slowly tilt the Hammer forward into a horizontal position.

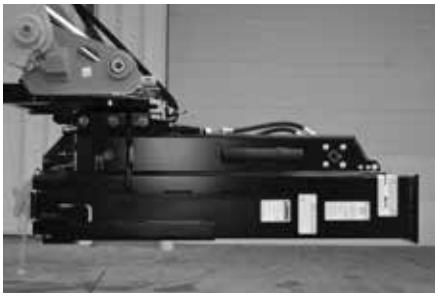

STEP 4: With the Hammer in the horizontal position, continue to slowly tilt the Hammer past horizontal until the weight begins to move in the Hammer case. Continue to tilt the Hammer to allow the weight to slowly slide in the Hammer case until it rests against the retention pin.

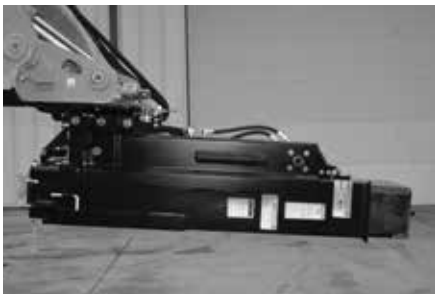

STEP 5: Slowly lower the Hammer onto a flat, level surface, or use blocking to securely support the Hammer.

⚠WARNING

Never work under equipment supported by hydraulics. Even with the vehicle shut off, equipment can suddenly drop if controls are actuated or hydraulic lines burst.

STEP 6: Shut off the vehicle. Engage the parking brake or securely chock vehicle to prevent movement.

⚠WARNING

Always shut off the vehicle engine, remove the key, lower vehicle arms, and relieve all hydraulic pressure before dismounting the vehicle. Never leave equipment unattended with the vehicle running.

STEP 7: Remove the strike plate from the bottom of the Hammer by tilting the upper edge toward the top of the Hammer, and use your hands to lift the bottom edge up to clear the bolt heads.

STEP 8: Install the specialized strike plate by inserting the upper edge of the plate into the bottom opening of the Hammer. Rotate the bottom edge of the strike plate past the bolt heads to the position shown below.

NOTE The rectangular shape of the bottom opening of the Hammer will permit installation of strike plates in only one orientation.

NOTE Specialized strike plates must be installed with the profile side of the plate positioned to the bottom of the Hammer. Incorrect installation will result in damage to the Hammer.

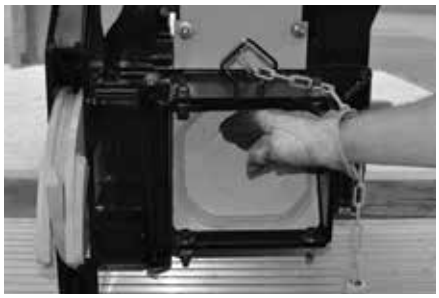

Assembly & Installation

(continued)

STEP 9: Using the vehicle, slowly tilt the Hammer to the upright position. Once the weight begins to slide down the Hammer case, momentarily stop tilting the Hammer so the weight can slowly slide to the bottom of the case.

STEP 10: Raise the Hammer so the bottom opening and strike plate are visible to the operator. Visually confirm that the strike plate is properly in place and is resting on the four (4) bolt heads.

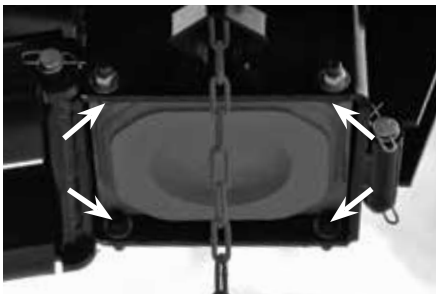

Strike Plate in Correct Position

⚠WARNING

Never place yourself between the vehicle and the attachment. Never allow anyone under the attachment at any time.

Operation

SM40

⚠ DANGER

The Hammer is designed to be operated from the vehicle operator station. Keep bystanders away from the work area. Do not operate with another person in contact with any part of the Hammer.

⚠ DANGER

Do not allow riders on the equipment at any time. There is no safe place for any riders.

⚠WARNING

Carry the load low. A heavy load can cause instability of the vehicle. Use extreme care during travel. Slow down on turns and watch out for bumps. Use all safety devices, including a seat belt, as recommended in the vehicle operator's manual.

⚠ DANGER

Contact with underground gas lines or electrical cables may result in serious injury or death from explosion or electrical shock. Before operating, call 811 or the local number to locate underground utilities. Do not drive near underground utility lines.

⚠ DANGER

Stay away from power lines when transporting, raising, or operating the attachment. Electrocution can occur without direct contact.

⚠WARNING

Before you operate the attachment, check over pins and connections to be sure all are securely in place. Make sure the Hammer is securely latched to the vehicle.

⚠ WARNING

Personal protection equipment including hard hat, safety glasses, safety shoes, gloves, and hearing protection are recommended during assembly, installation, operation, maintenance, service, removal, or movement of the attachment.

⚠ WARNING

Safe operation of equipment requires the operator's full attention. Avoid distractions such as radio headphones, cell phones, etc. while operating.

⚠ WARNING

Never place yourself between the vehicle and the attachment. Never allow anyone under the attachment at any time.

⚠ WARNING

Keep hands, feet, hair, jewelry, and clothing away from all moving and/or rotating parts.

STEP 1: Without the Grapple, the Hammer requires a second person to position the post. This person will set the post at the desired location and grasp the post securely, making sure his hands are at least 30 inches (30") from the top of the post.

⚠ DANGER

When using a second person, do not activate the auxiliary hydraulics until the second person is clear from the work area.

STEP 2: After the post is in position, move the vehicle with the arms raised, and position the Hammer directly over the top of the post.

⚠ DANGER

Never allow anyone under the attachment at any time.

STEP 3: Lower the Hammer onto the top of the post, ensuring the post is inside of the lower portion of the Hammer. Continue lowering the Hammer until the strike plate has moved up and the weight of the Hammer is supported by the post.

⚠ DANGER

After the post is in position, the second person must move away from the Hammer and vehicle.

STEP 4: After the second person has cleared the area, place the loader arms in the float position. If the vehicle is not equipped with float, the loader arms should be lowered, applying down force to the post.

STEP 5: Move the vehicle slowly left, right, forward, or backward as needed until the post is vertical to the ground.

STEP 6: The Hammer can now be activated by turning the auxiliary hydraulics to the forward position. If you are not using the loader float position, the loader arms should be lowered as the post is driven into the ground.

⚠ CAUTION

Maintain pressure on top of post at all times while driving to prevent jamming/loss of strike plate.

STEP 7: Drive the post to the desired depth, and deactivate the auxiliary hydraulics. Raise the Hammer until the post is cleared, and move to the next post.

NOTE As soon as the weight is released (starts to drop), deactivate the auxiliary hydraulics.

NOTE When stopping the Hammer, the weight catch should be visible through the viewing slots on the back of the case. Never stop the Hammer with the hammer weight partially raised.

NOTE The Hammer is capable of a short stroke, allowing the height of the post to be precisely controlled. To perform a short stroke:

A. Activate the auxiliary hydraulics in the forward direction to lift the weight.

B. When the weight has reached the desired height, deactivate the auxiliary hydraulics. The weight height required in order to fine-tune the post height is dependent upon post size and driving conditions. Experience will help the operator to develop the knowledge of what weight height is needed to properly fine-tune the post height.

C. Activate the auxiliary hydraulics in the reverse direction to allow the drive chains to reverse and the weight to fall.

D. Once the desired depth is reached, deactivate the auxiliary hydraulics, and raise the Hammer approximately three inches (3"). The strike plate should still be in contact with the top of the post.

E. Reduce the throttle to an idle, momentarily activate the auxiliary hydraulics in the forward direction, and verify the hammer weight is not being raised. If the hammer weight is raising, activate the auxiliary hydraulics in the reverse direction, allowing the drive chains to reverse and the weight to fall.

F. Repeat Step E if necessary to ensure the hammer weight is not being raised.

G. Activate the auxiliary hydraulics in the forward position until the weight catch is visible through the viewing slots on the back of the case.

H. Raise the Hammer until the post is fully cleared, and move to the next post.

⚠CAUTION

Do not leave hammer weight partially raised. Jamming/loss of strike plate or dry firing may occur. Repeated dry firing of hammer weight will cause severe damage to attachment and void all warranties.

SM40 w/ Grapple

⚠ DANGER

The Hammer is designed to be operated from the vehicle operator station. Keep bystanders away from the work area. Do not operate with another person in contact with any part of the Hammer.

⚠ DANGER

Do not allow riders on the equipment at any time. There is no safe place for any riders.

⚠ WARNING

Personal protection equipment including hard hat, safety glasses, safety shoes, gloves, and hearing protection are recommended during assembly, installation, operation, maintenance, service, removal, or movement of the attachment.

⚠ WARNING

Safe operation of equipment requires the operator's full attention. Avoid distractions such as radio headphones, cell phones, etc. while operating.

⚠ WARNING

Never place yourself between the vehicle and the attachment. Never allow anyone under the attachment at any time.

⚠ WARNING

Carry the load low. A heavy load can cause instability of the vehicle. Use extreme care during travel. Slow down on turns and watch out for bumps. Use all safety devices, including a seat belt, as recommended in the vehicle operator's manual.

⚠ DANGER

Contact with underground gas lines or electrical cables may result in serious injury or death from explosion or electrical shock. Before operating, call 811 or the local number to locate underground utilities. Do not drive near underground utility lines.

⚠ DANGER

Stay away from power lines when transporting, raising, or operating the attachment. Electrocution can occur without direct contact.

⚠ WARNING

Before you operate the attachment, check over pins and connections to be sure all are securely in place. Make sure the Hammer is securely latched to the vehicle.

STEP 1: Raise the Hammer approximately two feet (2') off the ground with the Hammer tilted slightly forward so the grapple jaws are visible.

STEP 2: Drive the vehicle forward, and position the grapple jaws around the post approximately four inches (4") from the top of the post.

STEP 3: Activate the auxiliary hydraulics in the reverse direction for two (2) seconds or until the grapple jaws are firmly clamped around the post.

STEP 4: Raise the loader arms until the bottom of the post is above the ground.

STEP 5: Position the post in the desired location and lower the Hammer until the post is inside the lower portion of the Hammer.

STEP 6: Intermittently activate auxiliary hydraulics in the forward direction to release the grapple jaws from the post. The Grapple will rotate up and away from the post.

STEP 7: Continue lowering the Hammer until the strike plate has moved up and the weight of the Hammer is supported by the post.

STEP 8: Place the loader arms in the float position. If the vehicle is not equipped with float, the loader arms should be lowered, applying down force to the post.

STEP 9: Move the vehicle slowly left, right, forward, or backward as needed until the post is vertical to the ground.

⚠WARNING

Keep hands, feet, hair, jewelry, and clothing away from all moving and/or rotating parts.

STEP 10: The Hammer can now be activated by turning the auxiliary hydraulics to the forward position. If you are not using the loader float position, the loader arms should be lowered as the post is driven into the ground.

⚠CAUTION

Maintain pressure on top of post at all times while driving to prevent jamming/loss of strike plate.

STEP 11: Drive the post to the desired depth, and deactivate the auxiliary hydraulics. Raise the Hammer until the post is cleared, and move to the next post.

NOTE As soon as the weight is released (starts to drop), deactivate the auxiliary hydraulics.

NOTE When stopping the Hammer, the weight catch should be visible through the viewing slots on the back of the case. Never stop the Hammer with the hammer weight partially raised.

NOTE The Hammer is capable of a short stroke, allowing the height of the post to be precisely controlled. To perform a short stroke:

A. Activate the auxiliary hydraulics in the forward direction to lift the weight.

B. When the weight has reached the desired height, deactivate the auxiliary hydraulics. The weight height required in order to fine-tune the post height is dependent upon post size and driving conditions. Experience will help the operator to develop the knowledge of what weight height is needed to properly fine-tune the post height.

C. Activate the auxiliary hydraulics in the reverse direction to allow the drive chains to reverse and the weight to fall.

D. Once the desired depth is reached, deactivate the auxiliary hydraulics, and raise the Hammer approximately three inches (3"). The strike plate should still be in contact with the top of the post.

E. Reduce the throttle to an idle, momentarily activate the auxiliary hydraulics in the forward direction, and verify the hammer weight is not being raised. If the hammer weight is raising, activate the auxiliary hydraulics in the reverse direction, allowing the drive chains to reverse and the weight to fall.

F. Repeat Step E if necessary to ensure the hammer weight is not being raised.

G. Activate the auxiliary hydraulics in the forward position until the weight catch is visible through the viewing slots on the back of the case.

H. Raise the Hammer until the post is fully cleared, and move to the next post.

⚠CAUTION

Do not leave hammer weight partially raised. Jamming/loss of strike plate or dry firing may occur. Repeated dry firing of hammer weight will cause severe damage to attachment and void all warranties.

SM40 w/ Tilt and Grapple

⚠ DANGER

The Hammer is designed to be operated from the vehicle operator station. Keep bystanders away from the work area. Do not operate with another person in contact with any part of the Hammer.

⚠ DANGER

Do not allow riders on the equipment at any time. There is no safe place for any riders.

⚠ WARNING

Personal protection equipment including hard hat, safety glasses, safety shoes, gloves, and hearing protection are recommended during assembly, installation, operation, maintenance, service, removal, or movement of the attachment.

⚠ WARNING

Safe operation of equipment requires the operator's full attention. Avoid distractions such as radio headphones, cell phones, etc. while operating.

⚠ WARNING

Never place yourself between the vehicle and the attachment. Never allow anyone under the attachment at any time.

⚠ WARNING

Carry the load low. A heavy load can cause instability of the vehicle. Use extreme care during travel. Slow down on turns and watch out for bumps. Use all safety devices, including a seat belt, as recommended in the vehicle operator's manual.

⚠ DANGER

Contact with underground gas lines or electrical cables may result in serious injury or death from explosion or electrical shock. Before operating, call 811 or the local number to locate underground utilities. Do not dig near underground utility lines.

⚠ DANGER

Stay away from power lines when transporting, raising, or operating the attachment. Electrocution can occur without direct contact.

⚠ WARNING

Before you operate the attachment, check over pins and connections to be sure all are securely in place. Make sure the Hammer is securely latched to the vehicle.

STEP 1: Remove the tilt lock pin.

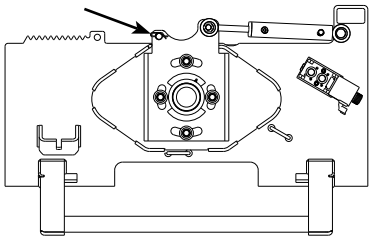

STEP 2: Raise the Hammer approximately two feet (2') off the ground with the Hammer tilted slightly forward so the grapple jaws are visible.

STEP 3: Drive the vehicle forward, and position the grapple jaws around the post approximately four inches (4") from the top of the post.

STEP 4: Activate the auxiliary hydraulics in the reverse direction for two (2) seconds or until the grapple jaws are firmly clamped around the post.

STEP 5: Raise the loader arms until the bottom of the post is above the ground.

STEP 6: Position the post in the desired location and lower the Hammer until the post is inside the lower portion of the Hammer.

STEP 7: Intermittently activate auxiliary hydraulics in the forward direction to release the grapple jaws from the post. The Grapple will rotate up and away from the post.

⚠WARNING

Keep hands, feet, hair, jewelry, and clothing away from all moving and/or rotating parts.

STEP 8: Continue lowering the Hammer until the strike plate has moved up and the weight of the Hammer is supported by the post.

STEP 9: Place the loader arms in the float position. If the vehicle is not equipped with float, the loader arms should be lowered, applying down force to the post.

STEP 10: Move the vehicle slowly left, right, forward, or backward as needed until the post is vertical to the ground.

STEP 11: Activate the electrical control switch.

STEP 12: Tilt the Hammer to a vertical position. Activate the auxiliary hydraulics in the forward direction to tilt the Hammer clockwise up to 20 degrees (20°). Activating the auxiliary hydraulics in reverse will tilt the Hammer counterclockwise up to 20 degrees (20°).

STEP 13: Deactivate the electrical control switch.

STEP 14: The Hammer can now be used by activating the auxiliary hydraulics in the forward direction. If you are not using the loader float position, the loader arms should be lowered as the post is driven into the ground.

⚠CAUTION

Maintain pressure on top of post at all times while driving to prevent jamming/loss of strike plate.

STEP 15: Drive the post to the desired depth, and deactivate the auxiliary hydraulics. Raise the Hammer until the post is cleared, and move to the next post.

NOTE As soon as the weight is released (starts to drop), deactivate the auxiliary hydraulics.

NOTE When stopping the Hammer, the weight catch should be visible through the viewing slots on the back of the case. Never stop the Hammer with the hammer weight partially raised.

NOTE The Hammer is capable of a short stroke, allowing the height of the post to be precisely controlled. To perform a short stroke:

A. Activate the auxiliary hydraulics in the forward direction to lift the weight.

B. When the weight has reached the desired height, deactivate the auxiliary hydraulics. The weight height required in order to fine-tune the post height is dependent upon post size and driving conditions. Experience will help the operator to develop the knowledge of what weight height is needed to properly fine-tune the post height.

C. Activate the auxiliary hydraulics in the reverse direction to allow the drive chains to reverse and the weight to fall.

D. Once the desired depth is reached, deactivate the auxiliary hydraulics, and raise the Hammer approximately three inches (3"). The strike plate should still be in contact with the top of the post.

E. Reduce the throttle to an idle, momentarily activate the auxiliary hydraulics in the forward direction, and verify the hammer weight is not being raised. If the hammer weight is raising, activate the auxiliary hydraulics in the reverse direction, allowing the drive chains to reverse and the weight to fall.

F. Repeat Step E if necessary to ensure the hammer weight is not being raised.

G. Activate the auxiliary hydraulics in the forward position until the weight catch is visible through the viewing slots on the back of the case.

H. Raise the Hammer until the post is fully cleared, and move to the next post.

⚠CAUTION

Do not leave hammer weight partially raised. Jamming/loss of strike plate or dry firing may occur. Repeated dry firing of hammer weight will cause severe damage to attachment and void all warranties.

Removal & Storage

Before storage, the Hammer should be thoroughly cleaned, washing off all dirt and grime. If you have a Grapple or Tilt, coat the exposed portions of the cylinder rod with grease. Make sure the hydraulic system is properly sealed against contaminants entering the unit. Always store the Hammer in a dry, covered location.

⚠DANGER

Never allow anyone under the attachment at any time.

⚠WARNING

Personal protection equipment including hard hat, safety glasses, safety shoes, gloves, and hearing protection are recommended during assembly, installation, operation, maintenance, service, removal, or movement of the attachment.

⚠CAUTION

Always use two people to handle heavy, unwieldy components during assembly, installation, maintenance, service, removal, or movement of the attachment.

STEP 1: Lower the parking stand by pulling up on the lock pin.

STEP 2: Lower the Hammer onto a flat, level surface in an area where children do not play. If the Hammer is equipped with a Grapple, lower the Hammer until the end of the Grapple jaws touch the ground. Shift the vehicle to the left while lowering the Hammer in order to rotate the Grapple to the horizontal position.

NOTE Always store the Hammer with the Grapple horizontal.

STEP 3: Disconnect the hydraulic hoses from the vehicle's auxiliary hydraulics.

⚠WARNING

Before connecting or disconnecting hydraulic lines or fittings, be sure to relieve all pressure by cycling all hydraulic controls after shutdown. Remember hydraulic systems are under pressure whenever the engine is running and may hold pressure after shutdown.

NOTE Connect the quick couplers together to prevent contaminants from entering the Hammer hydraulic system.

STEP 4: Follow your vehicle operator's manual for removing an attachment.

STEP 5: Tighten any loose nuts, bolts, and hydraulic components.

STEP 6: Replace any damaged or missing safety signs.

STEP 7: Lubricate the drive chain, and grease all zerks.

Troubleshooting

Problem	Possible Cause	Solution
Strike plate falls out or gets jammed	Weight is partially raised	When finished driving, make sure weight is down and weight catch is visible through viewing slots. Refer to *Operation*.
	Pressure not being applied to top of post at all times while driving	While driving posts, use loader "float" position or maintain pressure on top of post by lowering loader arms while driving. Refer to *Operation*.
Smaller post/pipe not driving straight	Post/pipe not centered in Hammer	Install Horseshoe Strike Plate PN 21212 or 5" Donut Strike Plate PN 21395. Refer to *Accessories*.
Weight is dropping unexpectedly	Weight is partially raised	When finished driving, make sure weight is down and weight catch is visible through viewing slots. Refer to *Operation*.
Vehicle battery is dead	Tilt switch was activated too long	Deactivate tilt switch when Hammer is not in use.
Weight not cycling	No post loaded in Hammer	A post must be pushed up inside the Hammer until it stops before the weight will cycle.
	Broken or missing shaft key	Replace key.
	Channel is not lubricated	Grease the inside of the Hammer case.
	Motor damaged	Contact Danuser.
Motor will not operate	Incorrect hose routing	Refer to *Hydraulics* for proper hose routing.
	Motor damaged	Contact Danuser.
Chain jumps	Incorrect chain tension	Adjust chain tension.
	Sprockets or chains are worn	Replace worn item(s).
Oil over heating	High flow activated	Ensure vehicle is not in high flow mode.
	Low oil level	Fill reservoir to proper level.
	Dirty oil or oil filter	Change oil and filter.
Tilt feature not working	No power to solenoid	Check electrical connections. Ensure switch is activated.
	Tilt lock pin in place	Remove tilt lock pin. Refer to *Operation*.
	Solenoid not working	Contact Danuser.
Tilt or grapple cylinder not working	Air in hydraulic system	Cycle hydraulics until both cylinders have completely extended and retracted (fully cycled).
	Incorrect hose routing	Refer to *Hydraulics* for proper hose routing.
	Tilt or Grapple obstruction	Ensure tilt and grapple mechanisms can move freely.
	Cylinder damaged	Contact Danuser.

For additional assistance, please call your dealer or contact Danuser direct:

Tel: (573) 642-2246
E-mail: sales@danuser.com

Maintenance & Lubrication

Proper servicing and maintenance are key to the long life of any attachment. Careful inspection and routine maintenance helps avoid costly downtime and repair. Do not use the Hammer with any damaged parts.

⚠ DANGER

Never attempt adjustments, service, or repairs while the equipment is in operation.

⚠ DANGER

Never allow anyone under the attachment at any time.

⚠ DANGER

Never work under equipment supported by hydraulics. Even with the vehicle shut off, equipment can suddenly drop if controls are actuated or if hydraulic lines burst.

⚠ WARNING

Personal protection equipment including hard hat, safety glasses, safety shoes, gloves, and hearing protection are recommended during assembly, installation, operation, maintenance, service, removal, or movement of the attachment.

⚠ WARNING

Before servicing or adjusting attachment, relieve all stored energy.

⚠ WARNING

Never check pressurized system for leaks with your bare hand. Wear proper hand and eye protection and use wood or cardboard when searching for suspected leaks. Oil escaping from pinhole leaks under pressure can penetrate skin and create a serious medical emergency. If any fluid is injected into the skin, gangrene, blood poisoning, even death may result. Obtain medical attention immediately.

⚠ WARNING

Do not modify the attachment. Modifications may weaken the integrity of the attachment and may impair the safety, function, life, and performance of the Hammer.

⚠ CAUTION

When making repairs or servicing the Hammer, use only parts that meet original equipment manufacturer's standards and requirements.

Maintenance	Interval
Inspect the attachment for any damage, worn parts, or cracked welds. Repair or replace as necessary.	Before each use
Check for damaged or missing safety signs. Replace as necessary.	Before each use
Check all fasteners. Ensure they are tight and secure. (Refer to *Torque Values Chart*.) Replace as necessary.	Daily
Check all hydraulic components for leaks or wear. Repair or replace as necessary.	Daily
Check for clean hydraulic oil. At all times, keep dirt and other contaminants from entering the hydraulic system during connecting and disconnecting the hydraulic system. Always use dust caps and plugs on all quick disconnects when not in use.	Daily
Visually inspect all welds for cracks. Check the weight catch for wear. Check all bolts and fasteners for tightness.	Every 40 Hours
Inspect the chain tensioning springs. Springs should be preloaded but not entirely collapsed.	Every 40 Hours

Lubrication Points

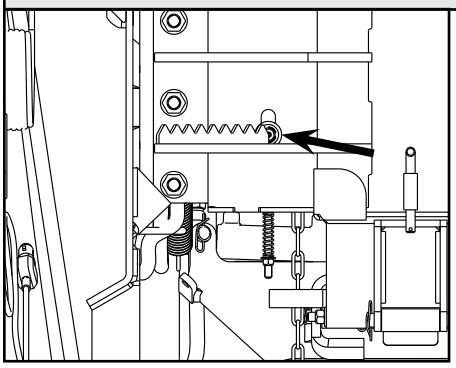

Chain Sprocket Shaft - 1 Zerk

Add multi-purpose grease until grease emerges

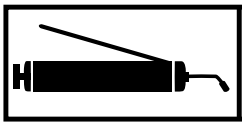

Every 10 Hours

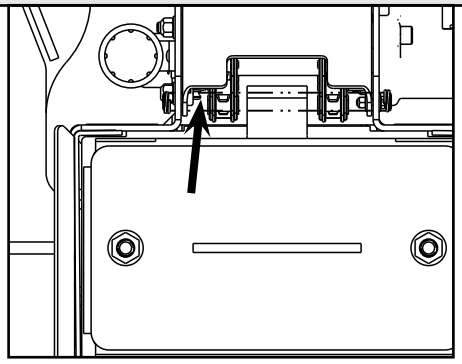

Drive Chain Bearing - 1 Zerk

Add multi-purpose grease until grease emerges

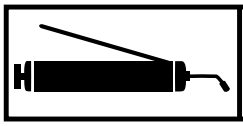

Every 10 Hours

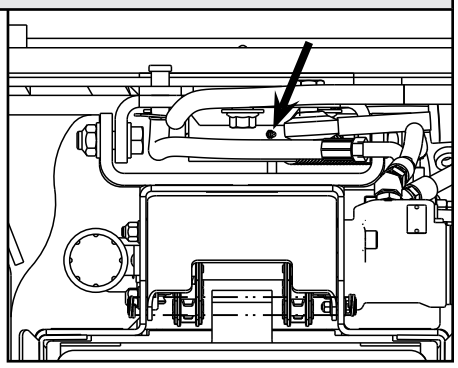

Tilt Pivot Boss (Tilt only) - 1 Zerk

Add multi-purpose grease until grease emerges

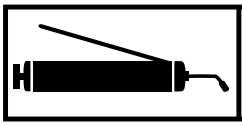

Every 10 Hours

Lubrication Points

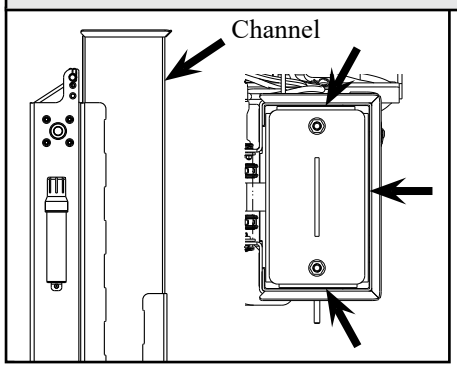

Drive Channel - 3 Channel Sides

Lubricate drive channel with multi-purpose grease

Every 40 Hours

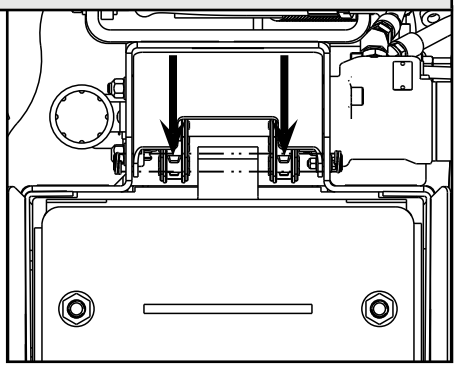

Drive Chain - 2 Chains

Lubricate drive chain with commercial grade chain lubricant

Every 40 Hours

Replacing Drive Chain

⚠ DANGER

Never attempt adjustments, service, or repairs while the equipment is in operation.

⚠ DANGER

Never allow anyone under the attachment at any time.

⚠ DANGER

Never work under equipment supported by hydraulics. Even with the vehicle shut off, equipment can suddenly drop if controls are actuated or if hydraulic lines burst.

⚠ WARNING

Personal protection equipment including hard hat, safety glasses, safety shoes, gloves, and hearing protection are recommended during assembly, installation, operation, maintenance, service, removal, or movement of the attachment.

⚠ WARNING

Before servicing or adjusting attachment, relieve all stored energy.

⚠ CAUTION

Always use two people to handle heavy, unwieldy components during assembly, installation, maintenance, service, removal, or movement of the attachment.

Recommended Tools

- 7/16" wrench (2)
- 9/16" wrench
- Flat-head screwdriver
- Pliers

STEP 1: Ensure the hammer weight is not partially raised by making sure the weight catch is visible through the viewing slots on the back of the case.

STEP 2: Remove the retention pin from the top of the case. Insert a hook into the lifting eye located on the top of the weight. Lift the weight out of the Hammer with a hoist, forklift, or another vehicle. Set the weight on the ground.

STEP 3: Carefully lay down the Hammer on its front side.

STEP 4: Remove the top and bottom chain covers.

STEP 5: Remove the retaining ring fastened to the lower sprocket shaft assembly, and pull out the shaft from the opposite side of the Hammer.

STEP 6: Remove the tensioning rods and shim(s). Slide chain slack to the top of the Hammer.

STEP 7: Find the chain catch and two pins that secure it. Remove the clips that retain the pins, and remove the pins.

STEP 8: Install new chains over the upper sprocket shaft assembly. Make sure open ends of the chain are at equal links away from sprockets.

STEP 9: Reinstall the chain catch and pins through the open ends of the new chain. Install clips on the pins.

STEP 10: Slide chain slack to the bottom of the Hammer, and insert the lower sprocket shaft assembly into the chain.

NOTE Shim(s) must be inserted between the tensioning rods and the lower sprocket shaft assembly to maintain proper sprocket location.

STEP 11: Insert the lower sprocket shaft through the side of the Hammer and through the tensioning rods and sprockets.

STEP 12: Install shim(s) and retaining ring on the end of the sprocket shaft.

STEP 13: Install bottom chain guard and tensioning springs. Tighten tensioning nuts until the springs are adequately preloaded but not entirely collapsed (approximately 1.5").

STEP 14: Install the top chain cover, stand Hammer upright, reinstall weight, and install the retention pin.

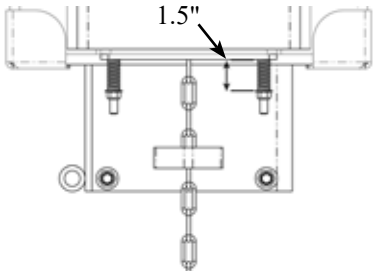

Tighten tensioning nuts until springs are adequately preloaded

⚠ WARNING

Do not tilt or operate the Hammer without the retention pin in place. The hammer weight could slide out of the Hammer and cause serious injury or death.

Clearing a Jammed Strike Plate, or Reinstalling a Strike Plate That Has Fallen Out

NOTE A strike plate that jams or falls out is due to improper operation of the Hammer. If you are experiencing this issue, refer to *Operation*.

Method 1 - Clearing a Jammed Strike Plate Using a Previously Driven Post

STEP 1: Confirm the weight catch is visible in the viewing slots and the hammer weight is resting on the jammed strike plate. If the weight is partially raised, activate the auxiliary hydraulics in the reverse direction to allow the weight to come to rest upon the jammed plate.

STEP 2: Using the vehicle, lower the Hammer onto the top of a previously driven post, ensuring the post is inside the lower portion of the Hammer. Continue lowering the Hammer, allowing the top of the post to make contact with the strike plate in an attempt to clear the jam. It might be necessary to raise and lower the Hammer onto the top of the post several times to clear the jam.

STEP 3: Raise the Hammer so the bottom opening and strike plate are visible to the operator. Visually confirm the strike plate is properly in place and is resting on the four (4) bolt heads.

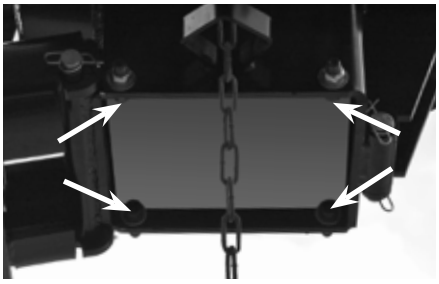

Strike Plate in Correct Position

⚠WARNING

Never place yourself between the vehicle and the attachment. Never allow anyone under the attachment at any time.

⚠ DANGER

Never attempt adjustments, service, or repairs while the equipment is in operation.

⚠ DANGER

Never allow anyone under the attachment at any time.

⚠ DANGER

Never work under equipment supported by hydraulics. Even with the vehicle shut off, equipment can suddenly drop if controls are actuated or if hydraulic lines burst.

⚠ WARNING

Personal protection equipment including hard hat, safety glasses, safety shoes, gloves, and hearing protection are recommended during assembly, installation, operation, maintenance, service, removal, or movement of the attachment.

⚠ WARNING

Before servicing or adjusting attachment, relieve all stored energy.

Method 2 - Clearing a Jammed Strike Plate or Reinstalling a Strike Plate That Has Fallen Out

STEP 1: Confirm the weight catch is visible in the viewing slots and the hammer weight is resting on the jammed strike plate or is resting in the lower portion of the case. If the weight is partially raised, intermittently activate the auxiliary hydraulics in the reverse direction to allow the weight to come to rest upon the jammed plate or come to rest in the lower portion of the case.

STEP 2: Ensure the retention pin is in place. The retention pin prevents the hammer weight from sliding out of the Hammer.

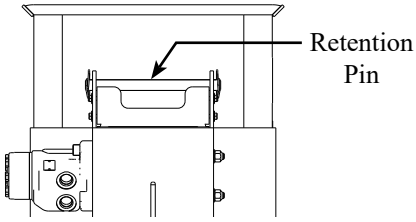

⚠ WARNING

Do not tilt or operate the Hammer without the retention pin in place. The hammer weight could slide out of the Hammer and cause serious injury or death.

STEP 3: Using the vehicle, slowly tilt the Hammer forward into a horizontal position.

⚠ WARNING

The Hammer must be securely latched to the vehicle. Ensure both locking handles are in the locked position with pins fully seated. An improperly latched Hammer can fall without warning.

⚠CAUTION

Always use two people to handle heavy, unwieldy components during assembly, installation, maintenance, service, removal, or movement of the attachment.

STEP 4: With the Hammer in the horizontal position, continue to slowly tilt the Hammer past horizontal until the weight begins to move in the Hammer case. Continue to tilt the Hammer to allow the weight to slowly slide in the Hammer case until it rests against the retention pin.

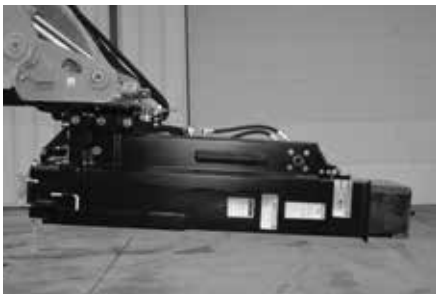

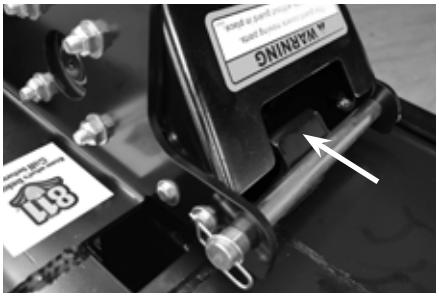

STEP 5: Slowly lower the Hammer onto a flat, level surface, or use blocking to securely support the Hammer.

⚠WARNING

Never work under equipment supported by hydraulics. Even with the vehicle shut off, equipment can suddenly drop if controls are actuated or hydraulic lines burst.

STEP 6: Shut off the vehicle. Engage the parking brake or securely chock vehicle to prevent movement.

⚠WARNING

Always shut off the vehicle engine, remove the key, lower vehicle arms, and relieve all hydraulic pressure before dismounting the vehicle. Never leave equipment unattended with the vehicle running.

STEP 7: If reinstalling a strike plate that has fallen out, proceed to Step 8. Use a hammer and punch to free the jammed strike plate. Once freed, remove the strike plate from the bottom of the Hammer by tilting the upper edge towards the top of the Hammer, and use your hands to lift the bottom edge up to clear the bolt heads.

STEP 8: Inspect the strike plate and the bottom portion of the Hammer for damage and foreign debris. Repair and remove debris if necessary.

⚠CAUTION

When making repairs or servicing the Hammer, use only parts that meet original equipment manufacturer's standards and requirements.

STEP 9: Reinstall the strike plate by inserting the upper edge of the plate into the bottom opening of the Hammer. Rotate the bottom edge of the strike plate past the bolt heads to the position shown below.

NOTE The rectangular shape of the bottom opening of the Hammer will permit installation of strike plates in only one orientation.

NOTE Specialized strike plates must be installed with the profile side of the plate positioned to the bottom of the Hammer. Incorrect installation will result in damage to the Hammer.

STEP 10: Using the vehicle, slowly tilt the Hammer to the upright position. Once the weight begins to slide down the Hammer case, momentarily stop tilting the Hammer so the weight can slowly slide to the bottom of the case.

STEP 11: Raise the Hammer so the bottom opening and strike plate are visible to the operator. Visually confirm that the strike plate is properly in place and is resting on the four (4) bolt heads.

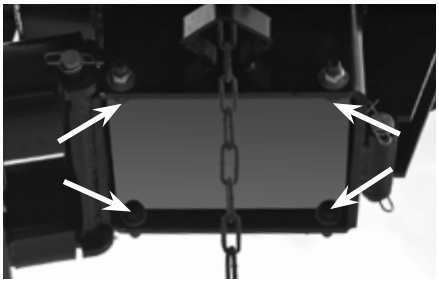

Strike Plate in Correct Position

⚠WARNING

Never place yourself between the vehicle and the attachment. Never allow anyone under the attachment at any time.

This page is intentionally blank.

Torque Values Chart

Torque Values Chart

Bolt Size (inches)	Bolt Head Identification: Grade 2		Grade 5		Grade 8		ASTM A574		Bolt Size (Metric)	Bolt Head Identification: Class 5.8		Class 8.8		Class 10.9		Class 12.9	
in−tpi	Nm	ft.-lb.	Nm	ft.-lb.	Nm	ft.-lb.	Nm	ft.-lb.	mm x pitch	Nm	ft.-lb.	Nm	ft.-lb.	Nm	ft.-lb.	Nm	ft.-lb.
1/4”−20	7.4	5.6	11	8	16	12	19	14	**M5 x 0.8**	4	3	6	5	9	7	11	8
1/4”−28	8.5	6	13	10	18	14	22	16	**M6 x 1**	7	5	11	8	15	11	18	13
5/16”−18	15	11	24	17	33	25	39	29	**M8 x 1.25**	17	12	26	19	36	27	42	31
5/16”−24	17	13	26	19	37	27	43	32	**M8 x 1**	18	13	28	21	39	29	46	34
3/8”−16	27	20	42	31	59	44	69	51	**M10 x 1.5**	33	24	52	39	72	53	84	62
3/8”−24	31	22	47	35	67	49	79	58	**M10 x 0.75**	39	29	61	45	85	62	98	72
7/16”−14	43	32	67	49	95	70	110	81	**M12 x 1.75**	58	42	91	67	125	93	148	109
7/16”−20	49	36	75	55	105	78	123	91	**M12 x 1.5**	60	44	95	70	130	97	153	113
1/2”−13	66	49	105	76	145	105	168	124	**M12 x 1**	90	66	105	77	145	105	167	123
1/2”−20	75	55	115	85	165	120	190	140	**M14 x 2**	92	68	145	105	200	150	235	173
9/16”−12	95	70	150	110	210	155	235	173	**M14 x 1.5**	99	73	155	115	215	160	254	187
9/16”−18	105	79	165	120	235	170	262	193	**M16 x 2**	145	105	225	165	315	230	365	269
5/8”−11	130	97	205	150	285	210	323	238	**M16 x 1.5**	155	115	240	180	335	245	388	286
5/8”−18	150	110	230	170	325	240	366	270	**M18 x 2.5**	195	145	310	230	405	300	504	372
3/4”−10	235	170	360	265	510	375	574	423	**M18 x 1.5**	220	165	350	260	485	355	561	414
3/4”−16	260	190	405	295	570	420	640	472	**M20 x 2.5**	280	205	440	325	610	450	712	525
7/8”−9	225	165	585	430	820	605	925	682	**M20 x 1.5**	310	230	650	480	900	665	1052	776
7/8”−14	250	185	640	475	905	670	1020	752	**M24 x 3**	480	355	760	560	1050	780	1231	908
1”−8	340	250	875	645	1230	910	1386	1022	**M24 x 2**	525	390	830	610	1150	845	1337	986
1”−12	370	275	955	705	1350	995	1555	1147	**M30 x 3.5**	960	705	1510	1120	2100	1550	2447	1805
1-1/8”−7	480	355	1080	795	1750	1290	1971	1454	**M30 x 2**	1060	785	1680	1240	2320	1710	2706	1996
1-1/8”−12	540	395	1210	890	1960	1440	2202	1624	**M36 x 3.5**	1730	1270	2650	1950	3660	2700	4272	3151
1-1/4”−7	680	500	1520	1120	2460	1820	2771	2044	**M36 x 2**	1880	1380	2960	2190	4100	3220	5095	3758
1-1/4”−12	750	555	1680	1240	2730	2010	3068	2263									
1-3/8”−6	890	655	1990	1470	3230	2380	3638	2683									
1-3/8”−12	1010	745	2270	1670	3680	2710	4143	3056									
1-1/2”−6	1180	870	2640	1950	4290	3160	4823	3557									
1-1/2”−12	1330	980	2970	2190	4820	3560	5426	4002									

KEY:

in−tpi = nominal thread diameter in inches−threads per inch
Nm = Newton-meter
ft.-lb. = foot pounds
mm x pitch = nominal thread diameter in millimeters by thread pitch

Torque tolerance +0%, -15% of torque values. Unless otherwise specified, use torque values listed above.

Case, Hammer Weight, Quick Attach

⚠WARNING

This product can expose you to chemicals known to the State of California to cause cancer and birth defects or other reproductive harm. For more information go to www.P65Warnings.ca.gov/product.

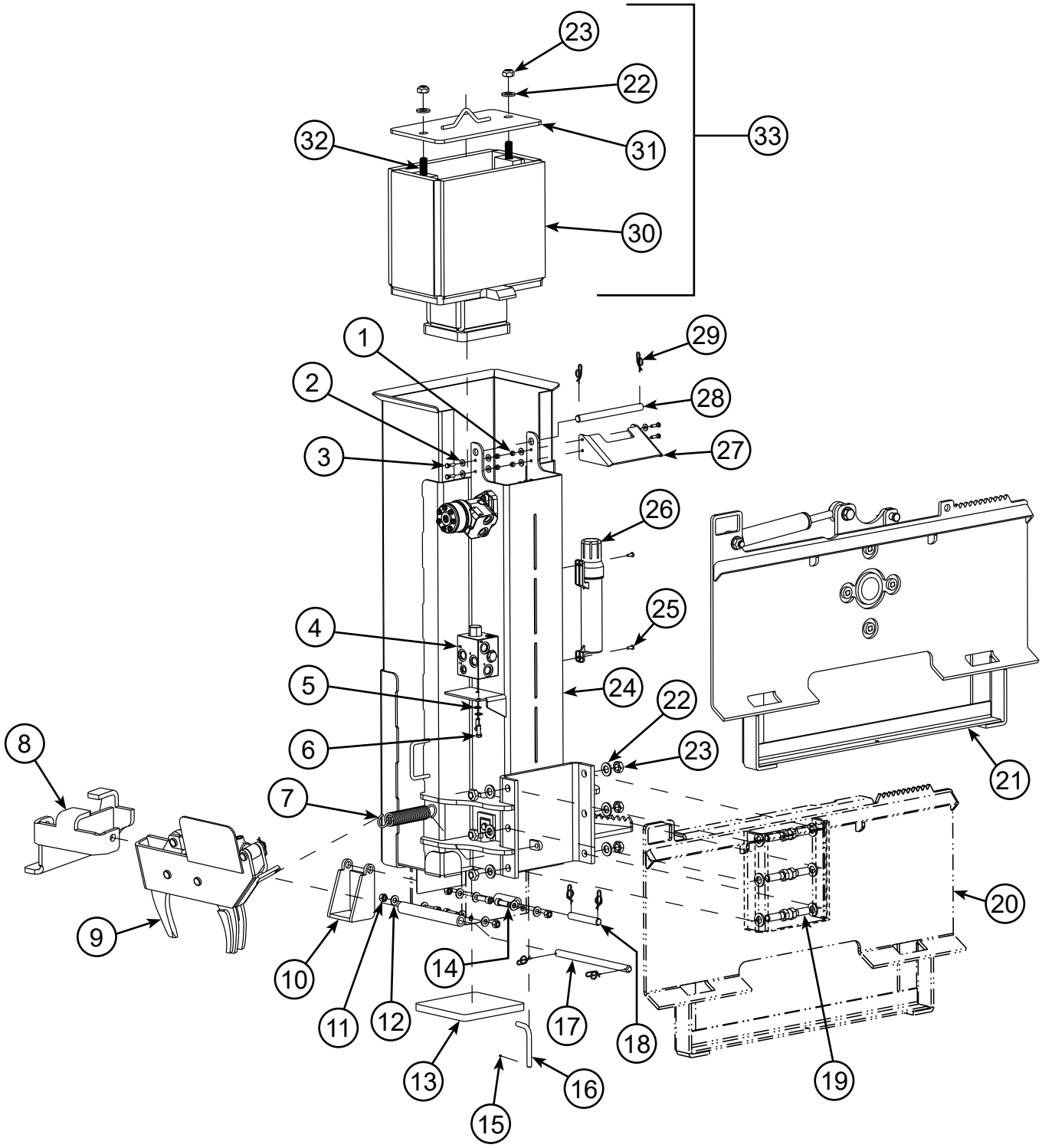

(continued)

REF. NO.	PART NO.	DESCRIPTION	QTY.
1	10195	Toplock Nut (1/4"−20)	4
2	21056	Flat Washer (1/4")	8
3	21055	Bolt (1/4"−20 x 1", Gr. 5)	4
4	21137	Hydraulic Manifold	1
5	2178	Flat Washer (3/8")	2
6	21157	Bolt (3/8"−16 x 1", Gr. 2)	2
7	21148	Grapple Spring	1
8	21169	Foot	1
9	21062	Grapple Assembly	1
10	21208	Parking Stand	1
11	10125	Toplock Nut (1/2"−13)	4
12	21156	Flat Washer (1/2")	8
13	21124	Strike Plate	1
14	6156	Socket Head Bolt (1/2"−13 x 1.5")	4
15	2164	Drive Screw	1
16	21206	Pin	1
17	21079	Pin	1
18	21207	Pin	1
19	21105	Bolt (3/4"−10 x 2.25", Gr. 5)	6
20	21086S	Quick Attach Plate (includes decals and safety signs)	1
21	21093S	Quick Attach Plate w/ Tilt (includes decals and safety signs)	1
22	10267	Flat Washer (3/4")	14
23	10268	Toplock Nut (3/4"−10)	8
24	21026	Case	1
25	21259	Drive Rivet	2
26	21258	Operator's Manual Canister	1
27	200280	Cover	1
28	21118	Retention Pin	1
29	21078	Rue Clip	6
30	21045	Weight	1
31	21051	Cover	1
32	21054	Stud (3/4"−10 x 3.25")	2
33	21044	Weight Assembly (Includes REF. NOS. 22, 23, 30-32)	1

Drive Assembly

⚠WARNING

This product can expose you to chemicals known to the State of California to cause cancer and birth defects or other reproductive harm. For more information go to www.P65Warnings.ca.gov/product.

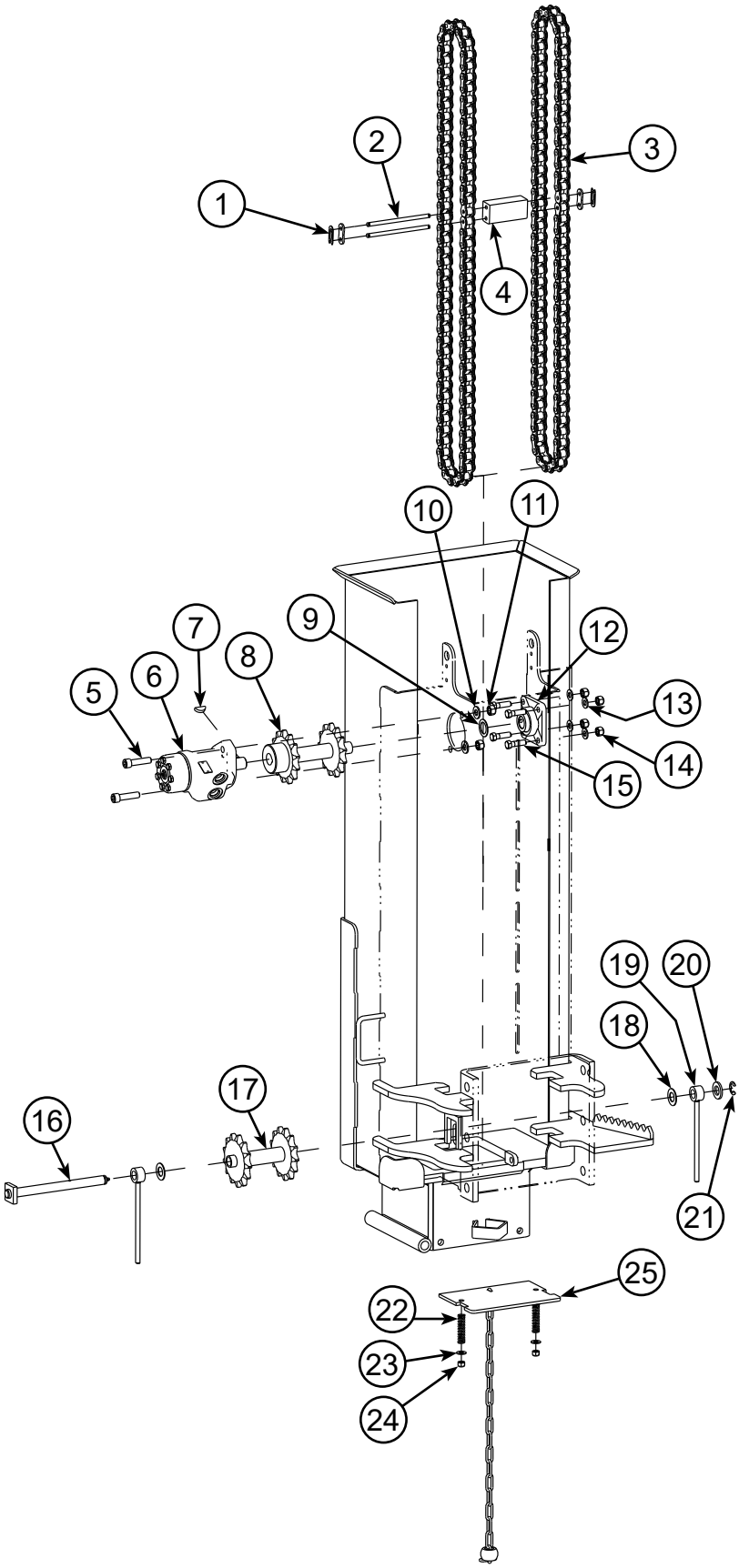

Parts

(continued)

REF. NO.	PART NO.	DESCRIPTION	QTY.
1	21119	Connecting Link	2
2	21024	Chain Pin	2
3	21025	Roller Chain (#80, 1" Pitch)	2
4	21122	Catch Weight	1
5	21126	Socket Head Bolt (1/2"−13 x 2")	2
6	21113	Hydraulic Motor (Includes REF. NO. 7)	1
	20079	Hydraulic Motor Seal Kit (Not Pictured)	
7	21281	Woodruff Key	1
8	21114	Upper Sprocket Shaft Assembly	1
9	21136	Shim (1")	1
10	21156	Flat Washer (1/2")	2
11	10125	Toplock Nut (1/2"−13)	2
12	21043	Bearing	1
13	2489	Flat Washer (7/16")	4
14	10197	Nut (7/16"−14)	4
15	21057	Bolt (7/16"−14 x 1.5", Gr. 5)	4
16	21040	Sprocket Shaft	1
17	21080	Lower Sprocket Shaft Assembly	1
18	21125	Shim	2
19	21083	Tensioning Rod	2
20	10267	Flat Washer (3/4")	1
21	2172	Retaining Ring	1
22	21123	Spring	2
23	2178	Flat Washer (3/8")	2
24	10412	Toplock Nut (3/8"−16")	2
25	21110	Cover Assembly	1

Hydraulics

⚠WARNING

This product can expose you to chemicals known to the State of California to cause cancer and birth defects or other reproductive harm. For more information go to www.P65Warnings.ca.gov/product.

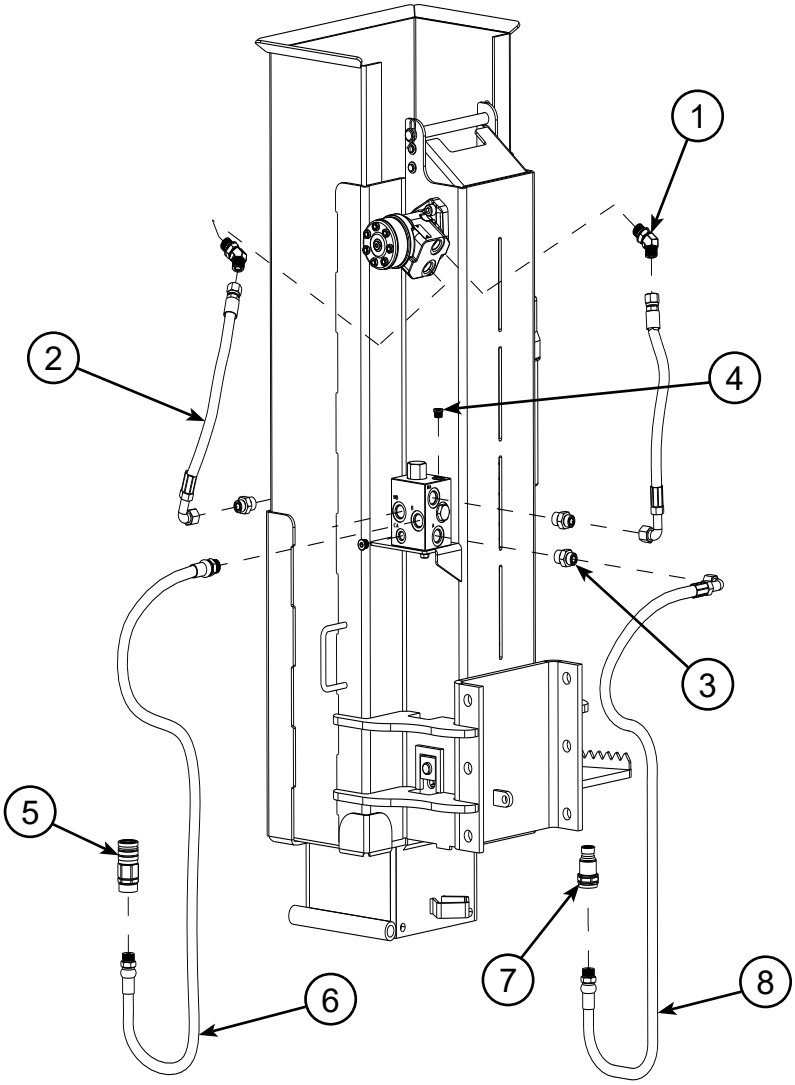

REF. NO.	PART NO.	DESCRIPTION	QTY.
1	196043	Adapter, 45° (#8 ORFS M to #10 ORB M)	2
2	196029	1/2" Hose Assembly (#8 ORFS F to #8 ORFS F 90°)	2
3	196044	Adapter (#8 ORFS M to #10 ORB M)	2
4	21141	Plug (#6 ORB)	2
5	10049	Female Coupler (1/2" flush-face, ISO 16028)	1
6	21139	1/2" Hose Assembly (#10 ORB M Swivel to #10 ORB M)	1
7	10048	Male Coupler (1/2" flush-face, ISO 16028)	1
8	196086	1/2" Hose Assembly (#8 ORFS F 90° to #10 ORB M)	1

Tilt Hydraulics

⚠WARNING

This product can expose you to chemicals known to the State of California to cause cancer and birth defects or other reproductive harm. For more information go to www.P65Warnings.ca.gov/product.

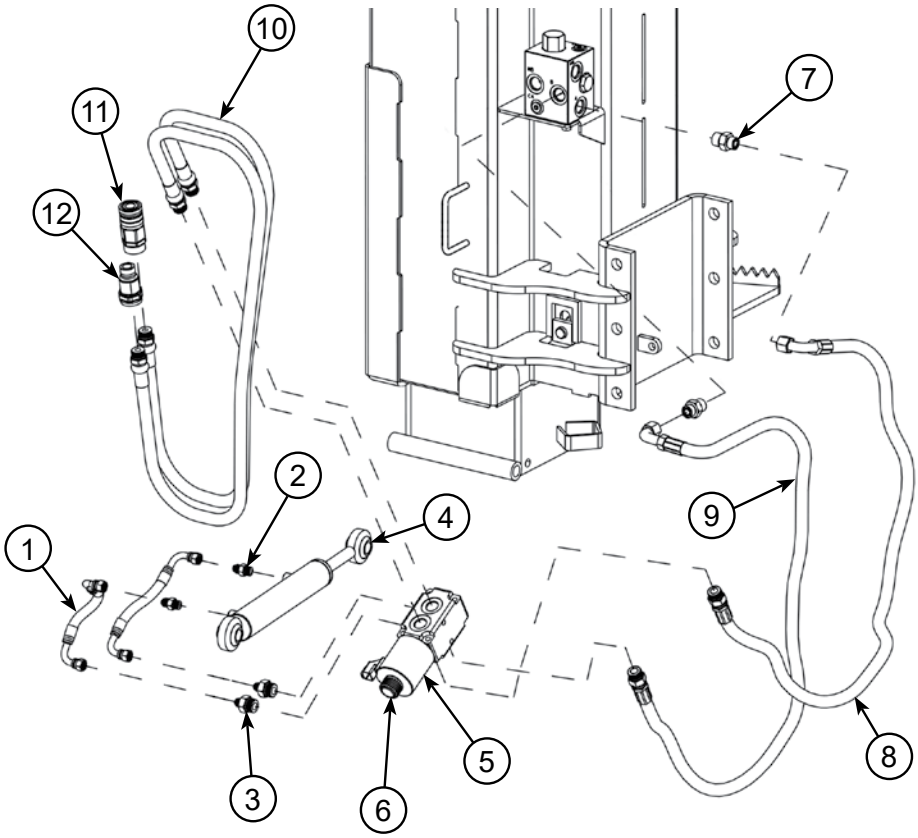

REF. NO.	PART NO.	DESCRIPTION	QTY.
1	21164	1/4" Hose Assembly (#6 JIC 90° Swivel to #6 JIC 90° Swivel)	2
2	21154	Restrictor (#6 ORB M to #6 JIC M)	2
3	21153	Adapter (#6 JIC M to #10 ORB M)	2
4	21103	Hydraulic Cylinder	1
	176030	Hydraulic Cylinder Seal Kit (Not Pictured)	
5	21128	Diverter Valve (Includes REF. NO. 6)	1
6	21340	Diverter Valve Solenoid	1
7	196044	Adapter (#8 ORFS M to #10 ORB M)	2
8	196032	1/2" Hose Assembly (#8 ORFS F 90° to #10 ORB M Swivel)	1
9	196033	1/2" Hose Assembly (#8 ORFS F 90° to #10 ORB M Swivel)	1
10	21145	1/2" Hose Assembly (#10 ORB M to #10 ORB M)	2
11	10049	Female Coupler (1/2" flush-face, ISO 16028)	1
12	10048	Male Coupler (1/2" flush-face, ISO 16028)	1

Grapple Hydraulics

⚠WARNING

This product can expose you to chemicals known to the State of California to cause cancer and birth defects or other reproductive harm. For more information go to www.P65Warnings.ca.gov/product.

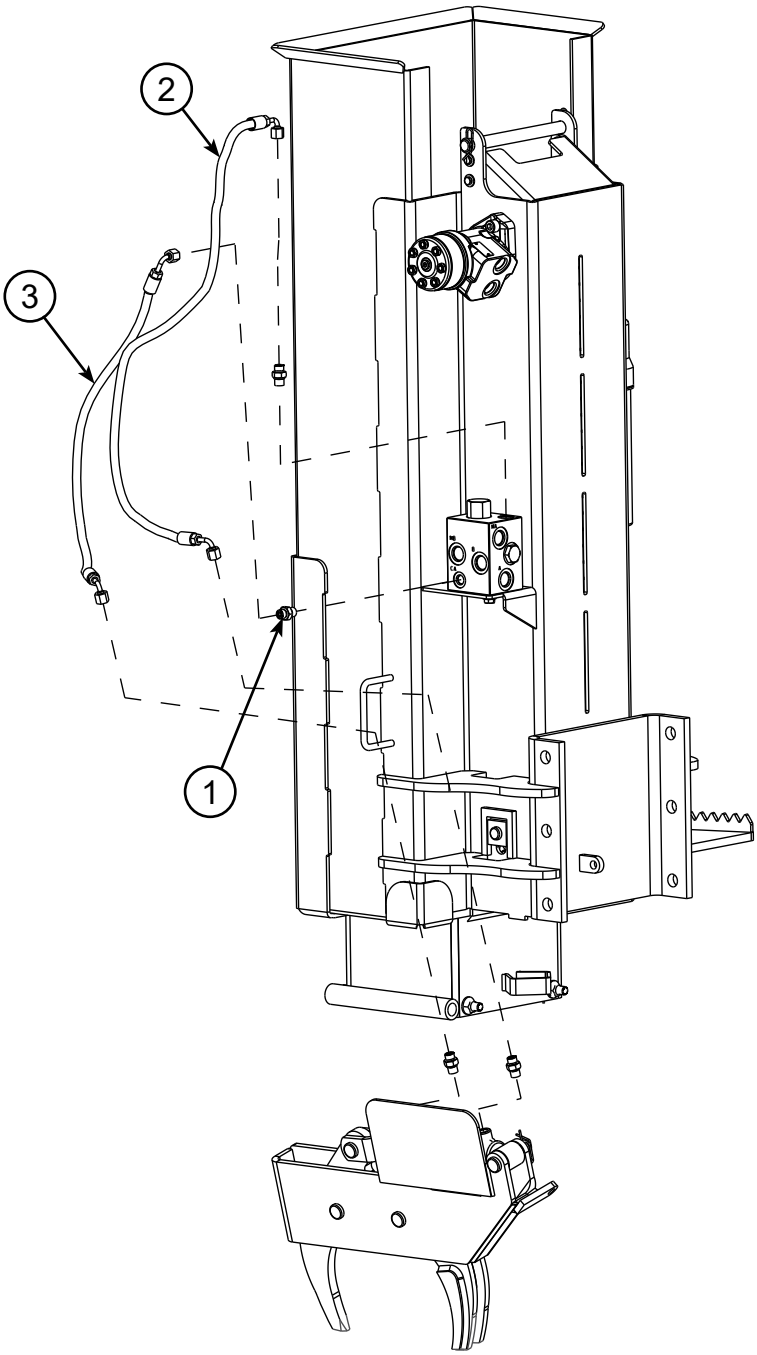

REF. NO.	PART NO.	DESCRIPTION	QTY.
1	196045	Adapter (#4 ORFS M to #6 ORB M)	4
2	196031	1/4" Hose Assembly (#4 ORFS F 90° Swivel to #4 ORFS F 90°)	1
3	196030	1/4" Hose Assembly (#4 ORFS F 90° to #4 ORFS F 90°)	1

Grapple

⚠WARNING

This product can expose you to chemicals known to the State of California to cause cancer and birth defects or other reproductive harm. For more information go to www.P65Warnings.ca.gov/product.

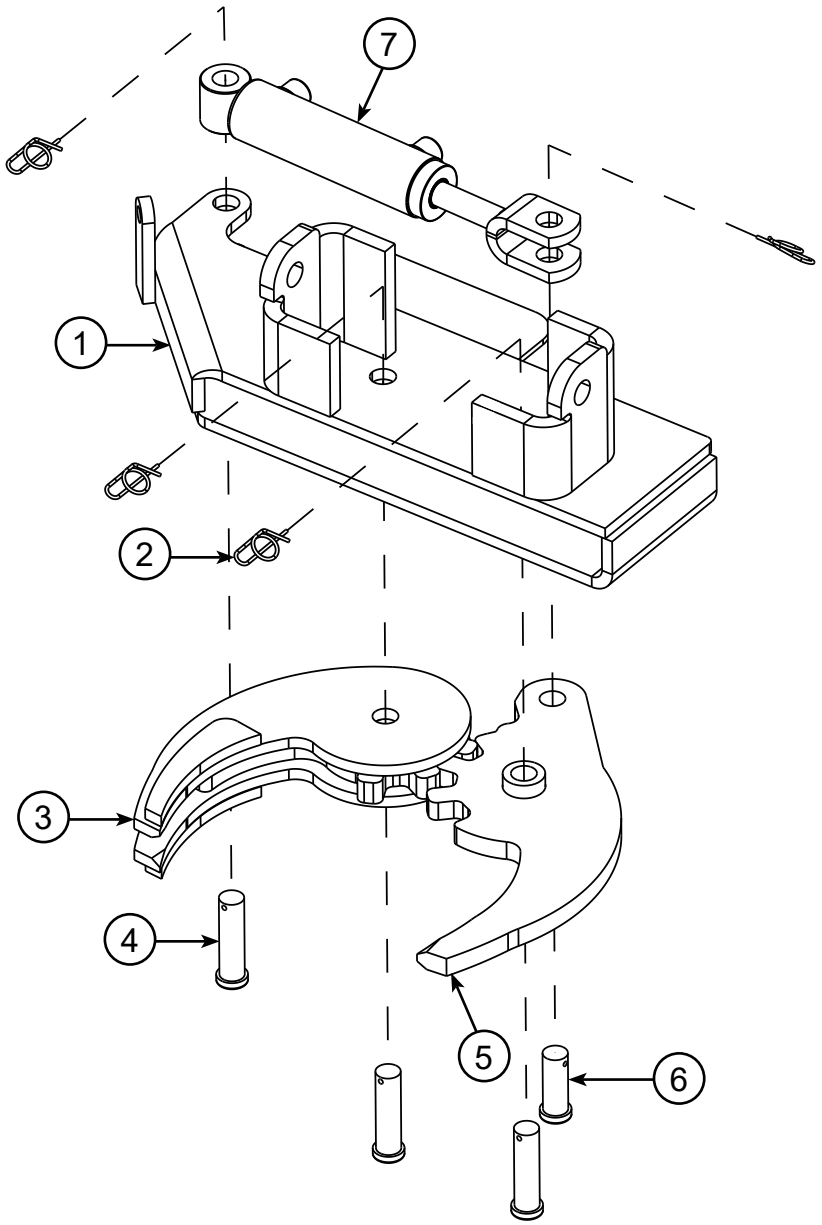

REF. NO.	PART NO.	DESCRIPTION	QTY.
1	21063	Case	1
2	21078	Rue Clip	4
3	21073	Left Jaw	1
4	21077	Clevis Pin	3
5	21070	Right Jaw	1
6	21134	Clevis Pin	1
7	21167	Hydraulic Cylinder Weldment	1
	176030	Hydraulic Cylinder Seal Kit (not pictured)	

Tilt

⚠WARNING

This product can expose you to chemicals known to the State of California to cause cancer and birth defects or other reproductive harm. For more information go to www.P65Warnings.ca.gov/product.

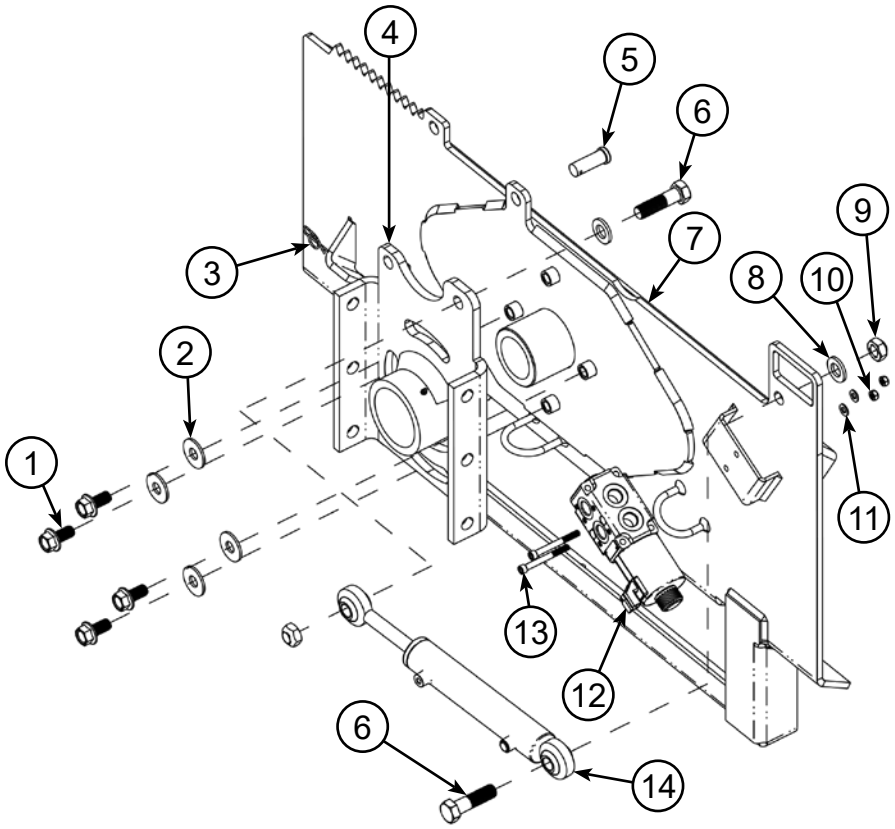

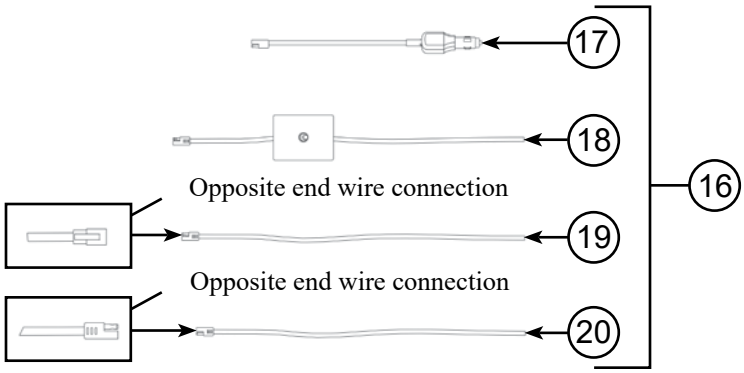

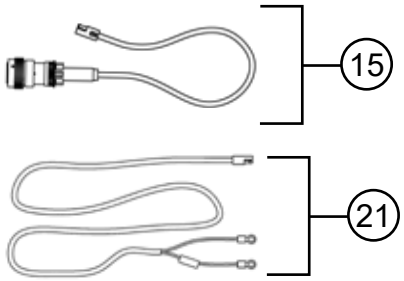

(continued)

REF. NO.	PART NO.	DESCRIPTION	QTY.
1	21108	Flange Bolt (5/8"−11 x 1.25", Gr. 8)	4
2	21107	Flat Washer (5/8")	4
3	21078	Rue Clip	1
4	21100	Tilt Bracket	1
5	21134	Clevis Pin	1
6	21106	Bolt (3/4"−10 x 2.75", Gr. 5)	2
7	21094	Quick Attach Plate	1
8	10267	Flat Washer (3/4")	2
9	10268	Toplock Nut (3/4"−10)	2
10	21159	Toplock Nut (5/16"−18)	2
11	6339	Flat Washer (5/16")	2
12	21128	Diverter Valve	1
13	21158	Socket Head Bolt (5/16"−18 x 3")	2
14	21103	Hydraulic Cylinder	1
	176030	Hydraulic Cylinder Seal Kit (Not Pictured)	
15	*21220	Optional Wiring Harness	1
16	21162	Wiring Harness (Includes REF. NOS. 17-20)	1
17	21343	Wire (12-volt Auxiliary Power)	1
18	21344	Wire (Control Switch)	1
19	21345	Wire (Solenoid)	1
20	21346	Wire (Extension)	1
21	*21253	Optional Wiring Harness (Battery Connection)	1

* For PN and full description, refer to *Accessories*.

⚠WARNING

This product can expose you to chemicals known to the State of California to cause cancer and birth defects or other reproductive harm. For more information go to www.P65Warnings.ca.gov/product.

Wiring Harness Options

Danuser takes care to ensure the accuracy of the information contained in this manual. We assume no liability for errors contained herein. It is the responsibility of the installer to ensure that all of the products are correct before installation. Proper assembly always requires that the installer use all instructions and safety procedures. We assume no liability for any errors made in product selection or installation.

Optional wiring harness allows for tilt function operation from the vehicle joystick controls. It replaces the standard harness 12-volt auxiliary power port plug and control switch on the Hammer.

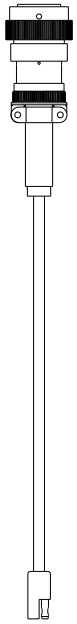

PN 21220-1	-	8-Pin used on ASV, Caterpillar, Komatsu, and Terex
PN 21220-2	-	14-Pin used on Bobcat (prior to 1999), Case, Kubota, New Holland, Takeuchi, and Volvo
PN 21220-3	-	14-Pin Deere used on John Deere
PN 21220-4	-	14-Pin Caterpillar used on Caterpillar
PN 21220-5	-	14-Pin used on Bobcat (1999 and current) and Gehl
* PN 21220-U1	-	8-Pin universal wiring harness. Contacts are crimped on wire but not installed in connector.
* PN 21220-U2	-	14-Pin universal wiring harness. Contacts are crimped on wire but not installed in connector.

* Requires connector contacts be installed in a switchable +12-volt pin location and ground pin location. Mapping of skid-steer connector pins required.

Wiring Harness (Battery Connection)

PN 21253 - Connects to battery terminals for alternative power connection for Hammer models with tilt.

T-post Adapter

PN 21149 - Must be added for driving T-posts.

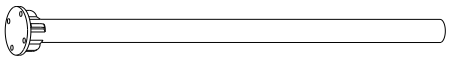

Front-End Loader Hose Kit

PN 196056 - 1/2” hoses, 25’ long, with 1/2” flush-face couplers (ISO 16028) on one end to connect to Hammer hoses, and ISO 7241 Series A couplers (compatible with ISO 5675 Pioneer couplers) on the opposite end to connect to tractor rear remotes. Includes bolt-on/weld-on mounting bracket.

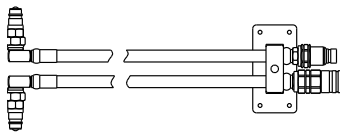

Hose Extension Kit (not shown)

PN 186065 - Extends Hammer hoses 24” when needed on certain skid-steers (e.g. JCB, Volvo). Includes two 24” hoses and fittings.

⚠WARNING

This product can expose you to chemicals known to the State of California to cause cancer and birth defects or other reproductive harm. For more information go to www.P65Warnings.ca.gov/product.

Floating Horseshoe Plate

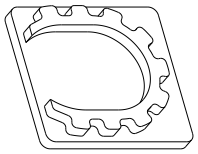

PN 21212 - Recommended when driving smaller diameter pipe. Aids in keeping the pipe centered in the driver and reduces wear and tear on machine. Does not interfere with the operation of the grapple. Works with 5″ diameter and smaller and with T-post adapter.

Guard Rail Plate

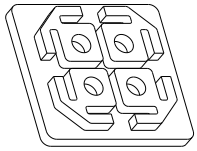

PN 21280 - Recommended when driving 6" or 8" I beams. Aids in keeping the guard rail from twisting and shifting. Does not work with Grapple.

5" Donut Plate

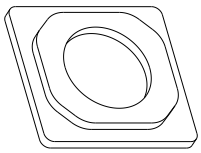

PN 21395 - Recommended when driving smaller diameter pipe. More effective than the Floating Horseshoe Plate in keeping the pipe centered and reduces wear and tear on the machine. Makes grappling of pipe more challenging. Works best when using a helper to position pipe in the Hammer. Works with 5” diameter and smaller and with T-post adapter.

Square Plates

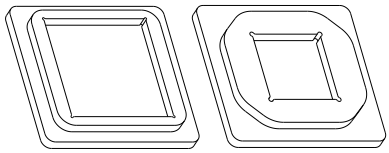

PN 180005 - Recommended when driving 4” square wood posts.

PN 180007 - Recommended when driving 6” square wood posts.

CB40 Breaker Kit

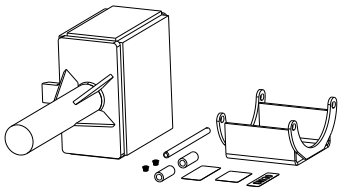

PN 21278 - Replaces Hammer weight with 500 lb. breaker attachment. Breaks up to 9" thick reinforced concrete.

Additional Weight Kit (not shown)

PN 21163 - Adds 200 lb. to machine weight for 60% more impact force.

⚠WARNING

This product can expose you to chemicals known to the State of California to cause cancer and birth defects or other reproductive harm. For more information go to www.P65Warnings.ca.gov/product.

Tilt

PN 21005 - May be added to any base model machine for tilt up to 20° left or right.

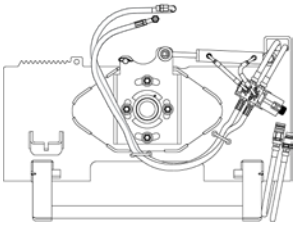

Grapple

PN 21004 - May be added to any base model machine for one-person operation.

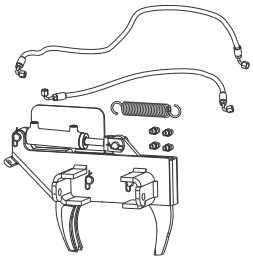

This page is intentionally blank.

Warranty

DANUSER

Model # _____

Serial # _____

LIMITED WARRANTY

Danuser Machine Company, LLC ("Danuser") warrants its products, under normal use and maintenance, to be free from defects in material and workmanship for period(s) specified below from the purchase date from an authorized Danuser Dealer. Start of the warranty period is determined by purchase date given on your returned WARRANTY REGISTRATION FORM. Proof of purchase may be required. This Limited Warranty is extended only to the original purchaser of Danuser products.

Hammer - 1 Year
Wear Items Not Covered Under Warranty - Hydraulic Hoses and Seals

1. During the applicable warranty period, Danuser, at its option, will repair or replace any part determined by Danuser to be defective. Such repair or replacement shall take place at Danuser's factory, or a location designated by Danuser. Under no circumstances shall Danuser be obligated for the cost of any repair or replacement by anyone other than Danuser without its express written consent.

2. Parts may not be returned without written authorization from Danuser.

3. Some purchased components, including but not limited to hydraulic components, are subject to the inspection and warranty of the respective manufacturer. Thus, delays in a warranty determination can be expected while Danuser awaits their decision.

4. This warranty is void if any attempt is made to make field repairs to hydraulic components. To qualify for warranty inspection, the "failed" part(s) must be returned in its original "failed" condition.

5. To make a claim under this warranty, first contact your authorized Danuser Dealer. The Danuser Dealer shall complete the Warranty Claim Form and obtain written authorization from Danuser to return parts. All warranty claims must include detailed information regarding make and model of vehicle on which the Danuser product was mounted, hours of use, description of events that led up to the failure, and any other information helpful in reviewing the warranty claim. All warranty returns must be prepaid. Shipments arriving at our factory on a freight collect basis will be refused by our receiving department. The freight charge will be credited if the parts are determined by Danuser to be defective, and the associated freight costs in returning those parts will be prepaid by Danuser. NOTE: Hydraulic components must arrive with all ports sealed from dirt and moisture. If a hydraulic component arrives with open ports, the warranty is void and no inspection will be made.

6. Products or parts thereof which, as determined by Danuser's examination, show wear from normal use, have been improperly operated, damaged by accident or negligence, field repaired, altered or modified are not considered defective in material and workmanship and are not covered by this warranty. This warranty does not apply to parts subject to normal wear ("Wear Items") or to damage caused by the failure to perform recommended maintenance or to replace worn parts. This warranty shall not obligate Danuser to bear any cost of labor for field repair, replacement, testing, or adjustment nor for damage caused by accident, abuse, misuse, or environmental elements.

7. Any parts or labor required to repair or replace parts not covered under this warranty will be charged to the customer. Parts repaired or replaced by Danuser are then covered by this warranty only for the remainder of the original warranty as if such parts were original parts.

8. Danuser reserves the right to change its specifications and designs at any time.

This warranty is exclusive and in lieu of all other express warranties, if any, including the implied warranties of merchantability and fitness for a particular purpose. It shall not extend beyond the duration of the expressed warranty provided herein and the remedy for violations of any implied warranty shall be limited to repair or replacement of the defective part pursuant to the terms contained herein. No employee, dealer, salesman, or representative is authorized to change this warranty in any way or grant any other warranty. Danuser shall not be liable for any consequential, incidental, or punitive damages, losses, or expenses, including those resulting from or caused by any defects.

Danuser Machine Company, LLC
500 E. 3rd St.
P.O. Box 368
Fulton, MO 65251

Tel: (573) 642-2246
E-mail: sales@danuser.com
Website: www.danuser.com